3-Way ball valve

SOLVENT SOCKET OUTLET

ITEM 849



REFERENCE	DESCRIPTION	Net weight	Volumen (m^3)	Gross weight	Unidades lote
111V003	3 WAY V. SOLV. SOCKET L PTFE 32	0,67	0,04460	3,97	4
111V005	3 WAY V. SOLV. SOCKET L PTFE 50	1,657	0,04460	5,1298	2
111V006	3 WAY V. SOLV. SOCKET L PTFE 63	2,685	0,03129	7,06	2
111V007	3 WAY V. SOLV. SOCKET L PTFE 75	4,881	0,04836	6,4247	1
111V043	3 WAY V. SOLV. SOCKET T PTFE 32	0,667	0,03129	3,8019	4
111V045	3 WAY V. SOLV. SOCKET T PTFE 50	1,646	0,04460	5,142	2
111V046	3 WAY V. SOLV. SOCKET T PTFE 63	2,8031	0,04460	7,001	2
111V047	3 WAY V. SOLV. SOCKET T PTFE 75	4,785	0,04836	6,3351	1
111V744	3 WAY V. SOLV. SOCKET L PTFE 40	1,647	0,04460	5,14	2
111V748	3 WAY V. SOLV. SOCKET L PTFE 90	5,141	0,04836	6,6851	1
111V754	3 WAY V. SOLV. SOCKET T PTFE 40	1,637	0,04460	5,12	2
111V758	3 WAY V. SOLV. SOCKET T PTFE 90	5,085	0,04836	6,7821	1

Pol. Ind. Plá Vallonga,
c/ Agua, 28
03006 ALICANTE (España)

+34 965 11 42 82
+34 965 11 48 62
tecnicocomercial@hidroten.es

Technical &
Commercial Service
+ 34 966 105 888

www.hidroten.es

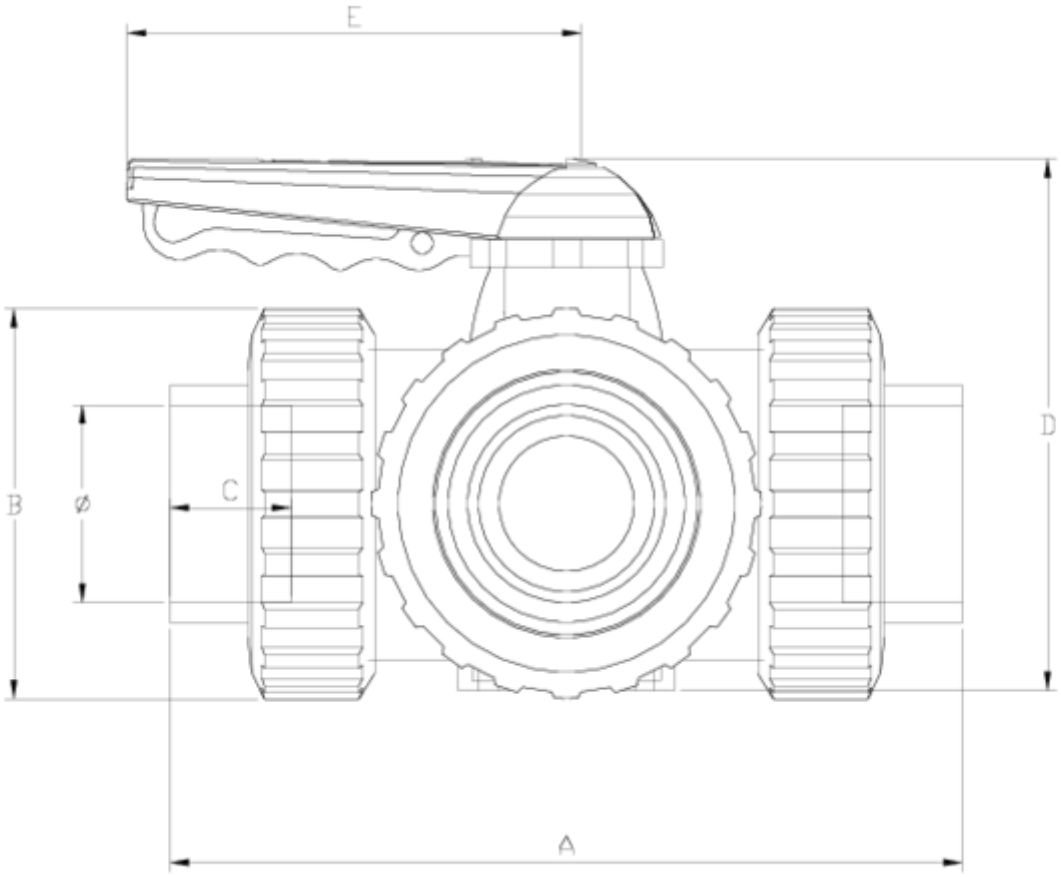

ITEM 849 | SOLVENT SOCKET OUTLET

PTFE	f	PESO (g)	DN	Modelo	A	B	C	D	E	PN	MEDIDA
11V003	32	712	25	L	160	72	22	121	114	**PN16**	MÉTRICO
11V744	40	1644	40	L	214	103	26	155	140	**PN16**	MÉTRICO
11V005	50	1653	40	L	216	103	31	155	140	**PN16**	MÉTRICO
11V006	63	2549	50	L	251	120	38	172	140	**PN16**	MÉTRICO
11V007	75	5008	65	L	308	150	45	218	160	**PN10**	MÉTRICO
11V748	90	5317	65	L	332	150	51	218	160	**PN10**	MÉTRICO
11V013	32	708	25	T	160	72	22	121	114	**PN16**	MÉTRICO
11V754	40	1634	40	T	214	103	26	155	140	**PN16**	MÉTRICO
11V045	50	1643	40	T	216	103	31	155	140	**PN16**	MÉTRICO
11V046	63	2531	50	T	251	120	38	172	140	**PN16**	MÉTRICO

Pol. Ind. Plá Vallonga,
c/ Agua, 28
03006 ALICANTE (España)

+34 965 11 42 82
+34 965 11 48 62
tecnicocomercial@hidroten.es

Technical &
Commercial Service
+ 34 966 105 888

www.hidroten.es

ITEM 849 | SOLVENT SOCKET OUTLET

11V047	75	4968	65	T	308	150	45	218	160	**PN10**	MÉTRICO
11V758	90	5277	65	T	332	150	51	218	160	**PN10**	MÉTRICO

Pol. Ind. Plá Vallonga,
c/ Agua, 28
03006 ALICANTE (España)

+34 965 11 42 82
+34 965 11 48 62
tecnicocomercial@hidroten.es

Technical &
Commercial Service
+ 34 966 105 888

www.hidroten.es

Product Documents

Product Certificates

Company Certificates







Pol. Ind. Plá Vallonga,
c/ Agua, 28
03006 ALICANTE (España)

+34 965 11 42 82
+34 965 11 48 62
tecnicocomercial@hidroten.es

Technical &
Commercial Service
+ 34 966 105 888

www.hidroten.es