3-Way ball valve

SOLVENT SOCKET OUTLET - 220V ELECTRIC ACTUATOR - FPM

ITEM 861



REFERENCE	DESCRIPTION	Net weight	Volumen (m^3)	Gross weight	Unidades lote
111V503	3 WAY V. ELECT. SOLV. S. L FPM 32	1,594	0,01782	2,26	1
111V505	3 WAY V. ELECT. SOLV. S. L FPM 50	3,4154	0,04460	4,0812	1
111V506	3 WAY V. ELECT. SOLV. S. L FPM 63	4,3697	0,04460	5,0355	1
111V507	3 WAY V. ELECT. SOLV. S. L FPM 75	7,2488	0,04836	8,0923	1
111V543	3 WAY V. ELECT. SOLV. S. T FPM 32	0	0,01782	0	1
111V545	3 WAY V. ELECT. SOLV. S. T FPM 50	3,4154	0,04460	4,0812	1
111V546	3 WAY V. ELECT. SOLV. S. T FPM 63	4,3697	0,04460	5,0355	1
111V547	3 WAY V. ELECT. SOLV. S. T FPM 75	7,2488	0,04836	8,0923	1
111V844	3 WAY V. ELECT. SOLV. S. L FPM 40	0	0,04460	0	1
111V848	3 WAY V. ELECT. SOLV. S. L FPM 90	0	0,04836	0	1
111V854	3 WAY V. ELECT. SOLV. S. T FPM 40	4,217	0,03129	4,79	1
111V858	3 WAY V. ELECT. SOLV. S. T FPM 90	0	0,04836	0	1

Pol. Ind. Plá Vallonga,
c/ Agua, 28
03006 ALICANTE (España)

+34 965 11 42 82
+34 965 11 48 62
tecnicocomercial@hidroten.es

Technical &
Commercial Service
+ 34 966 105 888

www.hidroten.es

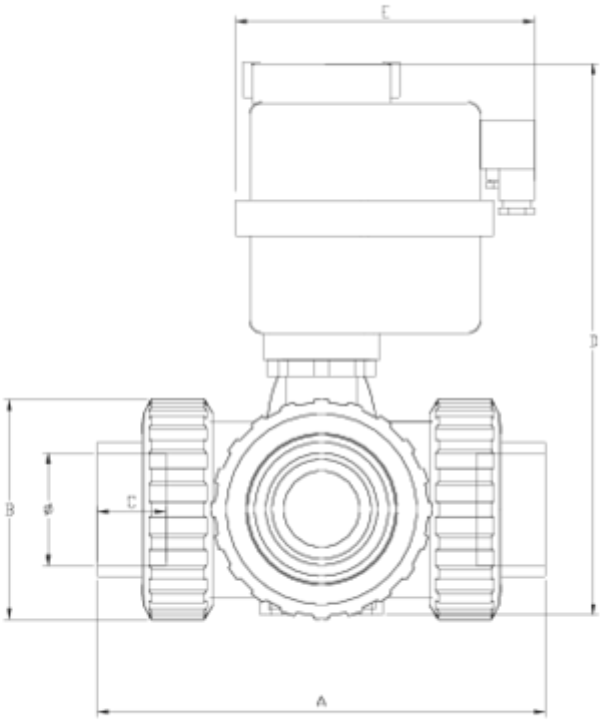

ITEM 861 | SOLVENT SOCKET OUTLET - 220V ELECTRIC ACTUATOR - FPM

VITON	f	Actuador	PESO (g)	DN	Modelo	A	B	C	D	E	PN	MEDIDA
11V503	32	H10	1612	25	L	160	72	22	220	169	**PN16**	MÉTRICO
11V844	40	H20	=D5-9	40	L	214	103	26	279	177	**PN16**	MÉTRICO
11V505	50	H20	3453	40	L	216	103	31	279	177	**PN16**	MÉTRICO
11V506	63	H35	4449	50	L	251	120	38	318	177	**PN16**	MÉTRICO
11V507	75	H55	7408	65	L	308	150	45	384	177	**PN10**	MÉTRICO
11V848	90	H55	=D7+309	65	L	=G7+24	150	51	384	177	**PN10**	MÉTRICO
11V543	32	H10	1608	25	T	160	72	22	220	169	**PN16**	MÉTRICO
11V854	40	H20	=D11-9	40	T	214	103	26	279	177	**PN16**	MÉTRICO
11V545	50	H20	3443	40	T	216	103	31	279	177	**PN16**	MÉTRICO
11V546	63	H35	4431	50	T	251	120	38	318	177	**PN16**	MÉTRICO

Pol. Ind. Plá Vallonga,
c/ Agua, 28
03006 ALICANTE (España)

+34 965 11 42 82
+34 965 11 48 62
tecnicocomercial@hidroten.es

Technical &
Commercial Service
+ 34 966 105 888

www.hidroten.es

ITEM 861 | SOLVENT SOCKET OUTLET - 220V ELECTRIC ACTUATOR - FPM

11V547	75	H55	7368	65	T	308	150	45	384	177	**PN10**	MÉTRICO
11V858	90	H55	=D13+309	65	T	=G13+24	150	51	384	177	**PN10**	MÉTRICO

Pol. Ind. Plá Vallonga,
c/ Agua, 28
03006 ALICANTE (España)

+34 965 11 42 82
+34 965 11 48 62
tecnicocomercial@hidroten.es

Technical &
Commercial Service
+ 34 966 105 888

www.hidroten.es

Product Documents

Product Certificates

Company Certificates







Pol. Ind. Plá Vallonga,
c/ Agua, 28
03006 ALICANTE (España)

+34 965 11 42 82
+34 965 11 48 62
tecnicocomercial@hidroten.es

Technical &
Commercial Service
+ 34 966 105 888

www.hidroten.es