3-Way ball valve

THERMO FUSION OUTLET

ITEM 852



REFERENCE	DESCRIPTION	Net weight	Volumen (m^3)	Gross weight	Unidades lote
111V033	3 WAY V. PE OUTLET L PTFE 32	0	0,04460	0	4
111V035	3 WAY V. PE OUTLET L PTFE 50	1,6715	0,04460	4,8129	2
111V036	3 WAY V. PE OUTLET L PTFE 63	2,5204	0,04460	6,5107	2
111V037	3 WAY V. PE OUTLET L PTFE 75	4,9478	0,03648	6,0728	1
111V073	3 WAY V. PE OUTLET T PTFE 32	0	0,04460	0	4
111V075	3 WAY V. PE OUTLET T PTFE 50	1,6715	0,04460	4,8129	2
111V076	3 WAY V. PE OUTLET T PTFE 63	2,5204	0,04460	6,5107	2
111V077	3 WAY V. PE OUTLET T PTFE 75	4,9478	0,03648	6,0728	1
111V098	3 WAY V. PE OUTLET L PTFE 90	5,406	0,04836	6,9497	1
111V188	3 WAY V. PE OUTLET T PTFE 90	5,351	0,04460	6,41	1

Pol. Ind. Plá Vallonga,
c/ Agua, 28
03006 ALICANTE (España)

+34 965 11 42 82
+34 965 11 48 62
tecnicocomercial@hidroten.es

Technical &
Commercial Service
+ 34 966 105 888

www.hidroten.es

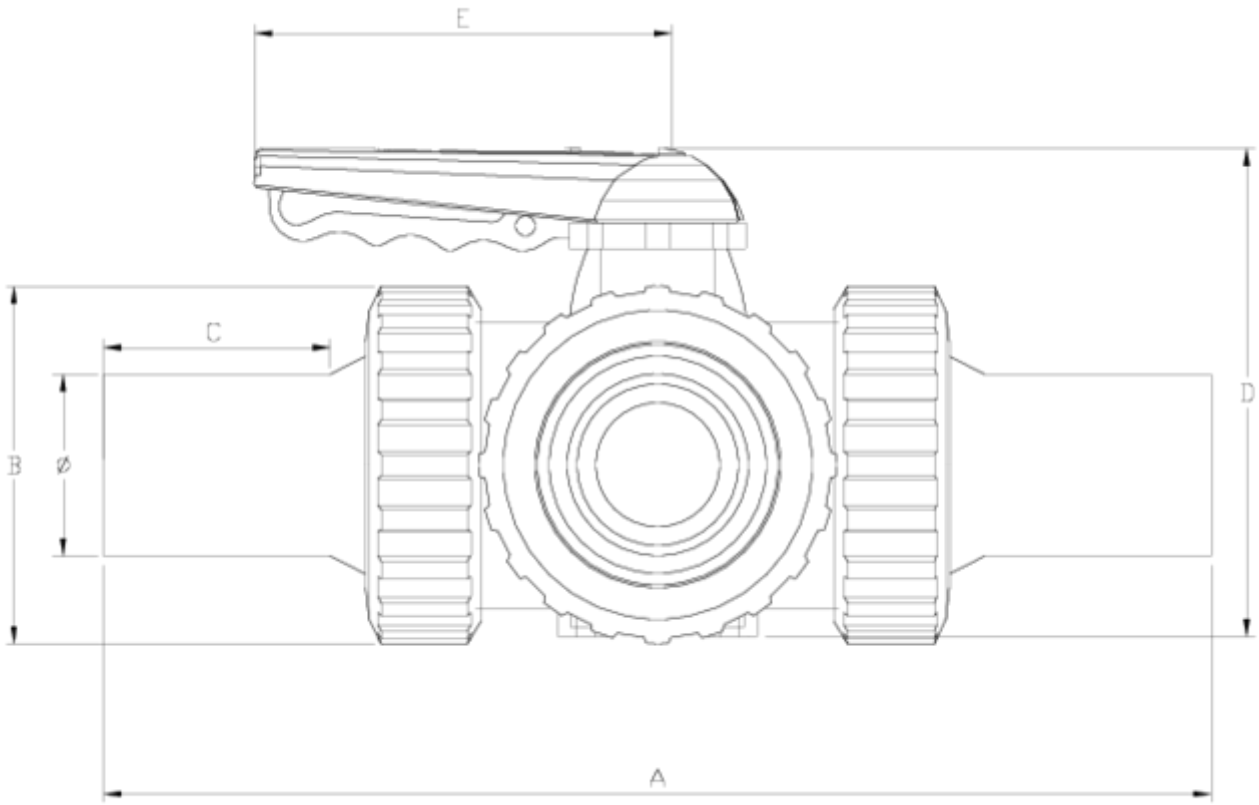

ITEM 852 | THERMO FUSION OUTLET

PTFE	f	PESO (g)	DN	Modelo	A	B	C	D	E	PN	MEDIDA
11V033	32	736	25	L	262	72	70	121	114	**PN16**	MÉTRICO
11V035	50	1707	40	L	356	103	79	155	140	**PN16**	MÉTRICO
11V036	63	2663	50	L	401	120	89	172	140	**PN16**	MÉTRICO
11V037	75	5053	65	L	452	150	95	218	160	**PN10**	MÉTRICO
11V098	90	=C6+330	65	L	460	150	99	218	160	**PN10**	MÉTRICO
11V073	32	732	25	T	262	72	70	121	114	**PN16**	MÉTRICO
11V075	50	1697	40	T	356	103	79	155	140	**PN16**	MÉTRICO
11V076	63	2645	50	T	401	120	89	172	140	**PN16**	MÉTRICO
11V077	75	5013	65	T	452	150	95	218	160	**PN10**	MÉTRICO
11V188	90	=C11+330	65	T	460	150	99	218	160	**PN10**	MÉTRICO

Pol. Ind. Plá Vallonga,
c/ Agua, 28
03006 ALICANTE (España)

+34 965 11 42 82
+34 965 11 48 62
tecnicocomercial@hidroten.es

Technical &
Commercial Service
+ 34 966 105 888

www.hidroten.es

ITEM 852 | THERMO FUSION OUTLET

Pol. Ind. Plá Vallonga,
c/ Agua, 28
03006 ALICANTE (España)

+34 965 11 42 82
+34 965 11 48 62
tecnicocomercial@hidroten.es

Technical &
Commercial Service
+ 34 966 105 888

www.hidroten.es

Product Documents

Product Certificates

Company Certificates







Pol. Ind. Plá Vallonga,
c/ Agua, 28
03006 ALICANTE (España)

+34 965 11 42 82
+34 965 11 48 62
tecnicocomercial@hidroten.es

Technical &
Commercial Service
+ 34 966 105 888

www.hidroten.es