## 3-Way ball valve

# THERMO FUSION OUTLET - FPM

## ITEM 856

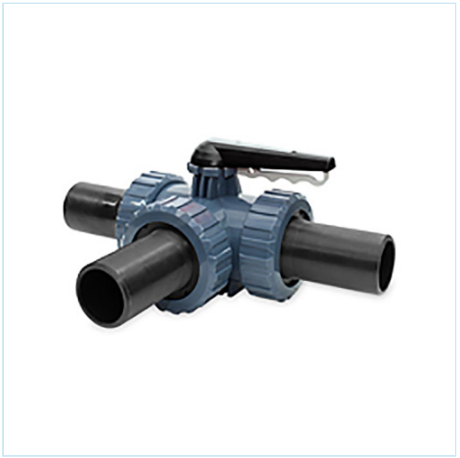

| REFERENCE | DESCRIPTION | Net weight | Volumen ($m^3$) | Gross weight | Unidades lote |
|---|---|---|---|---|---|
| 111V133 | 3 WAY V. PE OUTLET L FPM 32 | 0 | 0,04460 | 0 | 4 |
| 111V135 | 3 WAY V. PE OUTLET L FPM 50 | 1,6715 | 0,04460 | 4,8129 | 2 |
| 111V136 | 3 WAY V. PE OUTLET L FPM 63 | 2,5204 | 0,04460 | 6,5107 | 2 |
| 111V137 | 3 WAY V. PE OUTLET L FPM 75 | 4,9478 | 0,03648 | 6,0728 | 1 |
| 111V173 | 3 WAY V. PE OUTLET T FPM 32 | 0 | 0,04460 | 0 | 4 |
| 111V175 | 3 WAY V. PE OUTLET T FPM 50 | 1,6715 | 0,04460 | 4,8129 | 2 |
| 111V176 | 3 WAY V. PE OUTLET T FPM 63 | 2,5204 | 0,04460 | 6,5107 | 2 |
| 111V177 | 3 WAY V. PE OUTLET T FPM 75 | 4,9478 | 0,03648 | 6,0728 | 1 |
| 111V498 | 3 WAY V. PE OUTLET L FPM 90 | 5,406 | 0,04836 | 6,9497 | 1 |
| 111V908 | 3 WAY V. PE OUTLET T FPM 90 | 0 | 0,00000 | 0 | 1 |

Pol. Ind. Plá Vallonga,
c/ Agua, 28
03006 ALICANTE (España)

+34 965 11 42 82
+34 965 11 48 62
tecnicocomercial@hidroten.es

Technical &
Commercial Service
+ 34 966 105 888

www.hidroten.es

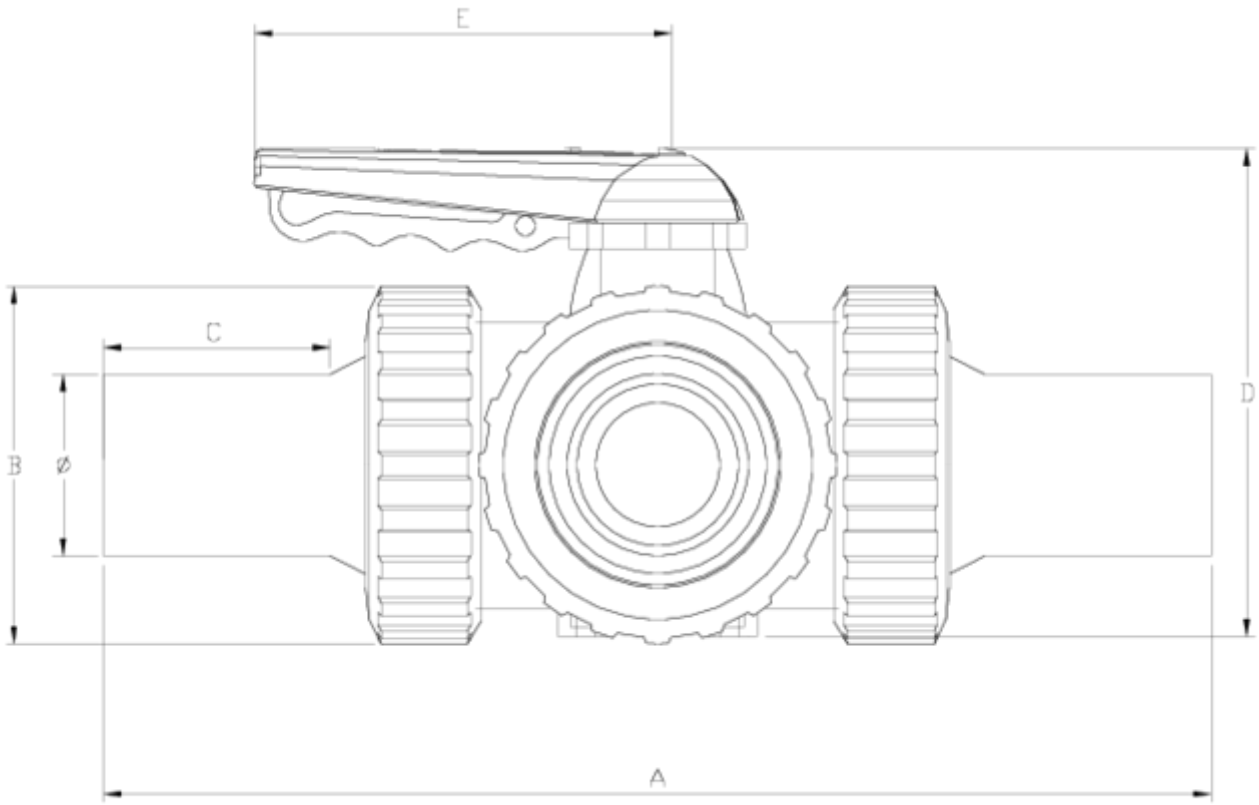


## ITEM 856 | THERMO FUSION OUTLET - FPM

| VITON | f | PESO (g) | DN | Modelo | A | B | C | D | E | PN | MEDIDA |
|---|---|---|---|---|---|---|---|---|---|---|---|
| 11V133 | 32 | 736 | 25 | L | 262 | 72 | 70 | 121 | 114 | **PN16** | MÉTRICO |
| 11V135 | 50 | 1707 | 40 | L | 356 | 103 | 79 | 155 | 140 | **PN16** | MÉTRICO |
| 11V136 | 63 | 2663 | 50 | L | 401 | 120 | 89 | 172 | 140 | **PN16** | MÉTRICO |
| 11V137 | 75 | 5053 | 65 | L | 452 | 150 | 95 | 218 | 160 | **PN10** | MÉTRICO |
| 11V498 | 90 | =C6+330 | 65 | L | 460 | 150 | 99 | 218 | 160 | **PN10** | MÉTRICO |
| 11V173 | 32 | 732 | 25 | T | 262 | 72 | 70 | 121 | 114 | **PN16** | MÉTRICO |
| 11V175 | 50 | 1697 | 40 | T | 356 | 103 | 79 | 155 | 140 | **PN16** | MÉTRICO |
| 11V176 | 63 | 2645 | 50 | T | 401 | 120 | 89 | 172 | 140 | **PN16** | MÉTRICO |
| 11V177 | 75 | 5013 | 65 | T | 452 | 150 | 95 | 218 | 160 | **PN10** | MÉTRICO |
| 11V908 | 90 | =C11+330 | 65 | T | 460 | 150 | 99 | 218 | 160 | **PN10** | MÉTRICO |

Pol. Ind. Plá Vallonga,
c/ Agua, 28
03006 ALICANTE (España)

+34 965 11 42 82
+34 965 11 48 62
tecnicocomercial@hidroten.es

Technical &
Commercial Service
+ 34 966 105 888

www.hidroten.es

# ITEM 856 | THERMO FUSION OUTLET - FPM

Pol. Ind. Plá Vallonga,
c/ Agua, 28
03006 ALICANTE (España)

+34 965 11 42 82
+34 965 11 48 62
tecnicocomercial@hidroten.es

Technical &
Commercial Service
+ 34 966 105 888

www.hidroten.es

## Product Documents

## Product Certificates

## Company Certificates



















Pol. Ind. Plá Vallonga,
c/ Agua, 28
03006 ALICANTE (España)

+34 965 11 42 82
+34 965 11 48 62
tecnicocomercial@hidroten.es

Technical &
Commercial Service
+ 34 966 105 888

www.hidroten.es