3-Way ball valve

THREADED FEMALE OUTLET - 220V ELECTRIC ACTUATOR - FPM

ITEM 862



REFERENCE	DESCRIPTION	Net weight	Volumen (m^3)	Gross weight	Unidades lote
111V513	3 WAY V. ELECT. FEM.THR. L FPM 1"	0	0,01782	0	1
111V515	3 WAY V. ELECT. FEM.THR. L FPM 1 1/2"	3,4964	0,04460	4,1622	1
111V516	3 WAY V. ELECT. FEM.THR. L FPM 2"	4,439	0,04460	5,1048	1
111V517	3 WAY V. ELECT. FEM.THR. L FPM 2 1/2"	7,3559	0,04836	8,1994	1
111V553	3 WAY V. ELECT. FEM.THR. T FPM 1"	0	0,01782	0	1
111V555	3 WAY V. ELECT. FEM.THR. T FPM 1 1/2"	3,4964	0,04460	4,1622	1
111V556	3 WAY V. ELECT. FEM.THR. T FPM 2"	4,439	0,04460	5,1048	1
111V557	3 WAY V. ELECT. FEM.THR. T FPM 2 1/2"	7,3559	0,04836	8,1994	1

Pol. Ind. Plá Vallonga,
c/ Agua, 28
03006 ALICANTE (España)

+34 965 11 42 82
+34 965 11 48 62
tecnicocomercial@hidroten.es

Technical &
Commercial Service
+ 34 966 105 888

www.hidroten.es

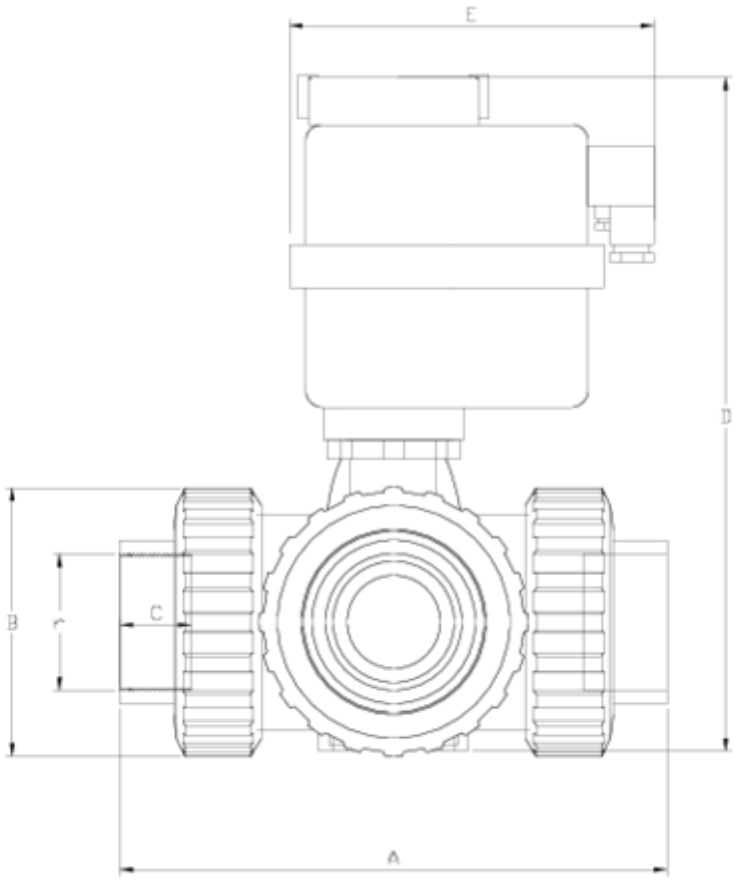

ITEM 862 | THREADED FEMALE OUTLET - 220V ELECTRIC ACTUATOR - FPM

VITON	r	Actuador	PESO (g)	DN	Modelo	A	B	C	D	E	PN	TIPO ROSCA
11V513	1"	H10	1636	25	L	162	72	23	220	169	**PN16**	BSP
11V515	1 1/2"	H20	3531	40	L	210	103	33	279	177	**PN16**	BSP
11V516	2"	H35	4518	50	L	261	120	29	318	177	**PN16**	BSP
11V517	2 1/2"	H55	7513	65	L	322	150	33	384	177	**PN10**	BSP
11V553	1"	H10	1632	25	T	162	72	23	220	169	**PN16**	BSP
11V555	1 1/2"	H20	3521	40	T	210	103	33	279	177	**PN16**	BSP
11V556	2"	H35	4500	50	T	261	120	29	318	177	**PN16**	BSP
11V557	2 1/2"	H55	7473	65	T	322	150	33	384	177	**PN10**	BSP

Pol. Ind. Plá Vallonga,
c/ Agua, 28
03006 ALICANTE (España)

+34 965 11 42 82
+34 965 11 48 62
tecnicocomercial@hidroten.es

Technical &
Commercial Service
+ 34 966 105 888

www.hidroten.es

Product Documents

Product Certificates

Company Certificates







Pol. Ind. Plá Vallonga,
c/ Agua, 28
03006 ALICANTE (España)

+34 965 11 42 82
+34 965 11 48 62
tecnicocomercial@hidroten.es

Technical &
Commercial Service
+ 34 966 105 888

www.hidroten.es