3-Way ball valve

THREADED FEMALE OUTLET - DOUBLE ACTING PNEUMATIC ACTUATOR - FPM

ITEM 878



REFERENCE	DESCRIPTION	Net weight	Volumen (m^3)	Gross weight	Unidades lote
111V673	V.E.3V L R/H 1" ACT.NEUM DE FPM	0	0,00891	0	1
111V675	V.E.3V L R/H 1 1/2" ACT.NEUM DE FPM	2,7664	0,04460	3,4322	1
111V676	V.E.3V L R/H 2" ACT.NEUM DE FPM	5,439	0,04460	6,1048	1
111V677	V.E.3V L R/H 2 1/2" ACT.NEUM DE FPM	7,8559	0,04836	8,6994	1
111V713	V.E.3V T R/H 1" ACT.NEUM DE FPM	0	0,00891	0	1
111V715	V.E.3V T R/H 1 1/2" ACT.NEUM DE FPM	2,7664	0,04460	3,4322	1
111V716	V.E.3V T R/H 2" ACT.NEUM DE FPM	5,439	0,04460	6,1048	1
111V717	V.E.3V T R/H 2 1/2" ACT.NEUM DE FPM	7,8559	0,04836	8,6994	1

Pol. Ind. Plá Vallonga,
c/ Agua, 28
03006 ALICANTE (España)

+34 965 11 42 82
+34 965 11 48 62
tecnicocomercial@hidroten.es

Technical &
Commercial Service
+ 34 966 105 888

www.hidroten.es

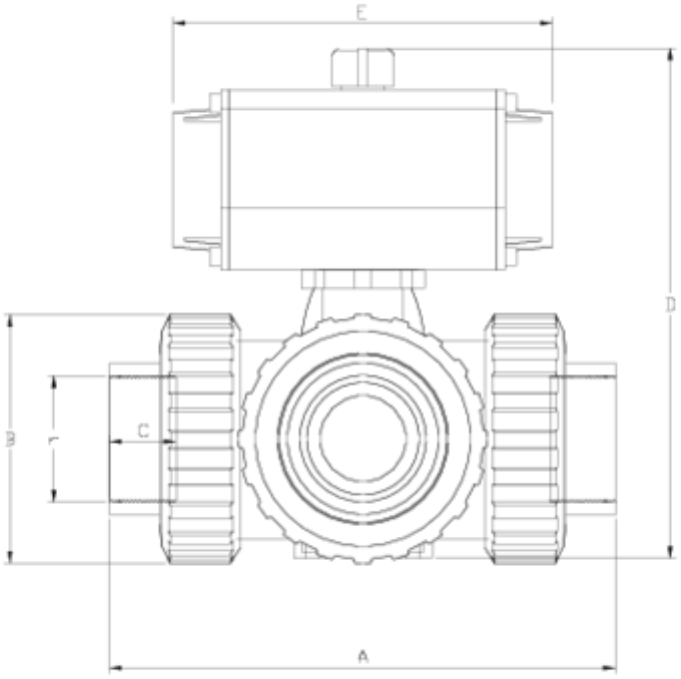

ITEM 878 | THREADED FEMALE OUTLET - DOUBLE ACTING PNEUMATIC ACTUATOR - FPM

VITON	r	Actuador	PESO (g)	DN	Modelo	A	B	C	D	E	PN	TIPO ROSCA
11V673	1"	H050 DE	1806	25	L	162	72	23	=87+96	138	**PN16**	BSP
11V675	1 1/2"	H050 DE	2801	40	L	210	103	33	217	138	**PN16**	BSP
11V676	2"	H075 DE	5518	50	L	261	120	29	267	156	**PN16**	BSP
11V677	2 1/2"	H075 DE	8013	65	L	322	150	33	308	156	**PN10**	BSP
11V713	1"	H050 DE	1802	25	T	162	72	23	=87+96	138	**PN16**	BSP
11V715	1 1/2"	H050 DE	2791	40	T	210	103	33	217	138	**PN16**	BSP
11V716	2"	H075 DE	5500	50	T	261	120	29	267	156	**PN16**	BSP
11V717	2 1/2"	H075 DE	7973	65	T	322	150	33	308	156	**PN10**	BSP

Pol. Ind. Plá Vallonga,
c/ Agua, 28
03006 ALICANTE (España)

+34 965 11 42 82
+34 965 11 48 62
tecnicocomercial@hidroten.es

Technical &
Commercial Service
+ 34 966 105 888

www.hidroten.es

Product Documents

Product Certificates

Company Certificates







Pol. Ind. Plá Vallonga,
c/ Agua, 28
03006 ALICANTE (España)

+34 965 11 42 82
+34 965 11 48 62
tecnicocomercial@hidroten.es

Technical &
Commercial Service
+ 34 966 105 888

www.hidroten.es