3-Way ball valve

THREADED FEMALE OUTLET - SINGLE ACTING PNEUMATIC ACTUATOR - FPM

ITEM 870



REFERENCE	DESCRIPTION	Net weight	Volumen (m^3)	Gross weight	Unidades lote
111V593	V.E.3V L R/H 1" ACT.NEUM SE FPM	0	0,00891	0	1
111V595	V.E.3V L R/H 1 1/2" ACT.NEUM SE FPM	3,4964	0,04460	4,1622	1
111V596	V.E.3V L R/H 2" ACT.NEUM SE FPM	5,439	0,04460	6,1048	1
111V597	V.E.3V L R/H 2 1/2" ACT.NEUM SE FPM	10,7559	0,04836	11,5994	1
111V633	V.E.3V T R/H 1" ACT.NEUM SE FPM	0	0,00891	0	1
111V635	V.E.3V T R/H 1 1/2" ACT.NEUM SE FPM	3,4964	0,04460	4,1622	1
111V636	V.E.3V T R/H 2" ACT.NEUM SE FPM	5,439	0,04460	6,1048	1
111V637	V.E.3V T R/H 2 1/2" ACT.NEUM SE FPM	10,7559	0,04836	11,5994	1

Pol. Ind. Plá Vallonga,
c/ Agua, 28
03006 ALICANTE (España)

+34 965 11 42 82
+34 965 11 48 62
tecnicocomercial@hidroten.es

Technical &
Commercial Service
+ 34 966 105 888

www.hidroten.es

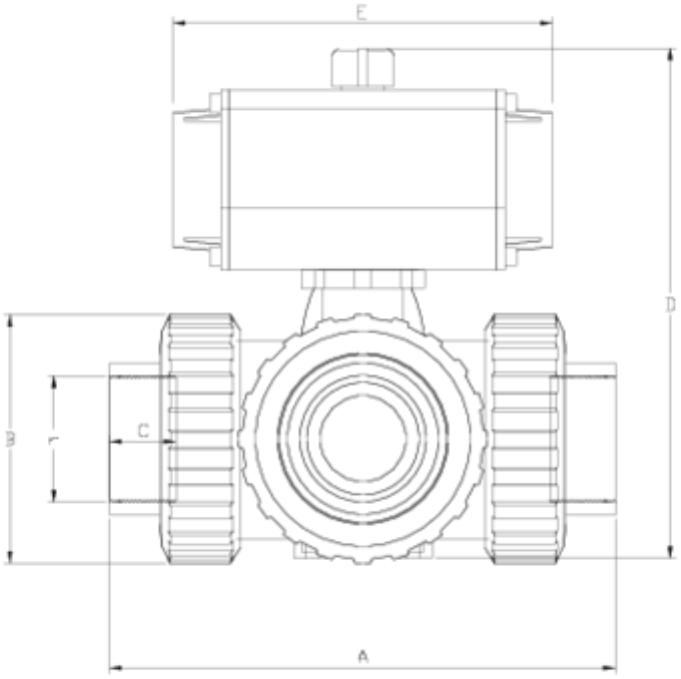

ITEM 870 | THREADED FEMALE OUTLET - SINGLE ACTING PNEUMATIC ACTUATOR - FPM

VITON	r	Actuador	PESO (g)	DN	Modelo	A	B	C	D	E	PN	TIPO ROSCA
11V593	1"	H050 SE	1936	25	L	162	72	23	183	138	**PN16**	BSP
11V595	1 1/2"	H063 SE	3631	40	L	210	103	33	233	156	**PN16**	BSP
11V596	2"	H075 SE	5988	50	L	261	120	29	267	210	**PN16**	BSP
11V597	2 1/2"	H100 SE	11933	65	L	322	150	33	333	280	**PN10**	BSP
11V633	1"	H050 SE	1932	25	T	162	72	23	183	138	**PN16**	BSP
11V635	1 1/2"	H063 SE	3621	40	T	210	103	33	233	156	**PN16**	BSP
11V636	2"	H075 SE	5970	50	T	261	120	29	267	210	**PN16**	BSP
11V637	2 1/2"	H100 SE	11893	65	T	322	150	33	333	280	**PN10**	BSP

Product Documents

Product Certificates

Company Certificates







Pol. Ind. Plá Vallonga,
c/ Agua, 28
03006 ALICANTE (España)

+34 965 11 42 82
+34 965 11 48 62
tecnicocomercial@hidroten.es

Technical &
Commercial Service
+ 34 966 105 888

www.hidroten.es