Angle seat valves and filters

Angle seat valve, solvent socket outlet

ITEM 447

REFERENCE	DESCRIPTION	Net weight	Volumen (m^3)	Gross weight	Unidades lote
1021011	ANGLE SEAT V. FEM.20 SOLV.SOCKET	0,26535	0,03648	4,07	10
1021012	ANGLE SEAT V. FEM. SOLV.25 SOCKET	0,39335	0,03648	5,345	10
1021013	ANGLE SEAT V. FEM. SOLV.32 SOCKET	0,6348	0,03648	6,938	10



Pol. Ind. Plá Vallonga,
c/ Agua, 28
03006 ALICANTE (España)

+34 965 11 42 82
+34 965 11 48 62
tecnicocomercial@hidroten.es

Technical &
Commercial Service
+ 34 966 105 888

www.hidroten.es

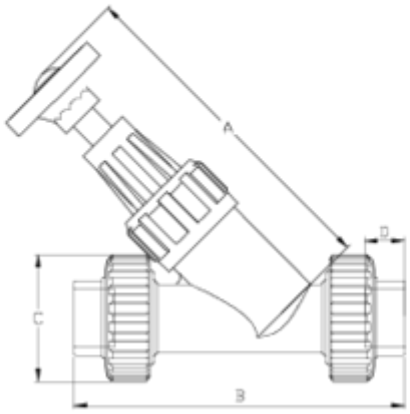

ITEM 447 | Angle seat valve, solvent socket outlet

CÓDIGO	f	DN	Peso (g)	A	B	C	D	PN	MEDIDA
21011	20	15	251	146	138	52	16	**PN16**	MÉTRICO
21012	25	20	380	173	162	59	19	**PN16**	MÉTRICO
21013	32	25	565	195	181	69	22	**PN16**	MÉTRICO

Pol. Ind. Plá Vallonga,
c/ Agua, 28
03006 ALICANTE (España)

+34 965 11 42 82
+34 965 11 48 62
tecnicocomercial@hidroten.es

Technical &
Commercial Service
+ 34 966 105 888

www.hidroten.es

Product Documents

Product Certificates

Company Certificates







Pol. Ind. Plá Vallonga,
c/ Agua, 28
03006 ALICANTE (España)

+34 965 11 42 82
+34 965 11 48 62
tecnicocomercial@hidroten.es

Technical &
Commercial Service
+ 34 966 105 888

www.hidroten.es