'Basic' ball valves

BASIC BALL VALVE FEMALE THREAD - MALE SOLVENT SOCKET OUTLET PE

ITEM 777



REFERENCE	DESCRIPTION	Net weight	Volumen (m^3)	Gross weight	Unidades lote
1011608	VALV. ENLACE ENC. MACHO-R/HEMBRA 20-1/2"	0,1687	0,02244	7,074	40
1011609	VALV. ENLACE ENC. MACHO-R/HEMBRA 25-3/4"	0,197	0,02244	8,2	40
1011610	VALV. ENLACE ENC. MACHO-R/HEMBRA 32-1"	0,324	0,03682	10,34	30
1011611	VALV. ENLACE ENC. MACHO-R/HEMBRA 40-1 1/4"	0,557	0,03129	11,75	20
1011612	BALL VALVE MALE PLAIN/ FEMALE TH. 50-1 1/2"	0,911133	0,03682	14,24	15
1011613	BALL VALVE PLAIN MALE/ THREAD FEMALE 63-2"	1,365	0,04460	14,35	10

Pol. Ind. Plá Vallonga,
c/ Agua, 28
03006 ALICANTE (España)

+34 965 11 42 82
+34 965 11 48 62
tecnicocomercial@hidroten.es

Technical &
Commercial Service
+ 34 966 105 888

www.hidroten.es

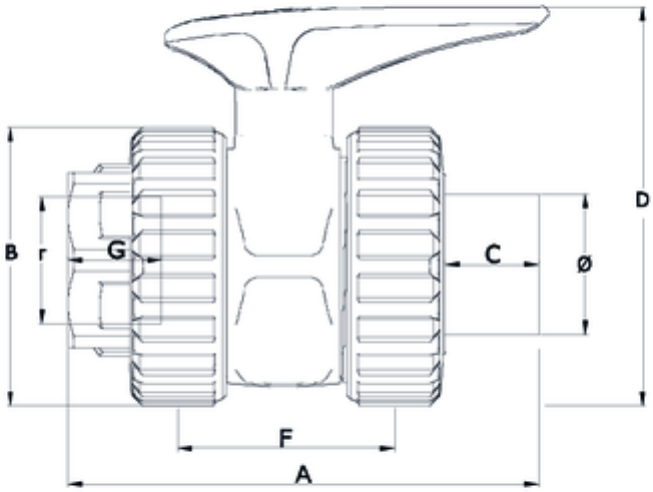

ITEM 777 | BASIC BALL VALVE FEMALE THREAD - MALE SOLVENT SOCKET OUTLET PE

CÓDIGO	f	PESO (g)	DN	A	B	C	D	F	G	PN	TIPO ROSCA
11608	20-1/2"	155	15	98	52	16	78	47	17	**PN16**	BSP
11609	25-3/4"	197	20	107	59	19	84	51	20	**PN16**	BSP
11610	32-1"	324	25	131	70	23	97	66	23	**PN16**	BSP
11611	40-1 1/4"	557	32	150	84	25	128	72	26	**PN16**	BSP
11612	50-1 1/2"	830	40	167	99	31	142	77	33	**PN16**	BSP
11613	63-2"	1365	50	186	121	38	165	90	29	**PN16**	BSP

Product Documents

Product Certificates

Company Certificates







Pol. Ind. Plá Vallonga,
c/ Agua, 28
03006 ALICANTE (España)

+34 965 11 42 82
+34 965 11 48 62
tecnicocomercial@hidroten.es

Technical &
Commercial Service
+ 34 966 105 888

www.hidroten.es