'basic' bi-directional ball valve

BIDIRECTIONAL BALL VALVE MALE SOLVENT SOCKET OUTLET FPM

ITEM 788



REFERENCE	DESCRIPTION	Net weight	Volumen (m^3)	Gross weight	Unidades lote
111D250	V.BID. S/ENC MACHO 20 FPM	0,169	0,01553	7,0867	40
111D251	V.BID. S/ENC MACHO 25 FPM	0,215	0,02244	9,0877	40
111D252	V.BID. S/ENC MACHO 32 FPM	0,363	0,03129	11,463	30
111D253	V.BID. S/ENC MACHO 40 FPM	0,626	0,03129	13,093	20
111D254	V.BID. S/ENC MACHO 50 FPM	0,885	0,03129	13,848	15
111D255	V.BID. S/ENC MACHO 63 FPM	1,498	0,03682	15,5292	10

Pol. Ind. Plá Vallonga,
c/ Agua, 28
03006 ALICANTE (España)

+34 965 11 42 82
+34 965 11 48 62
tecnicocomercial@hidroten.es

Technical &
Commercial Service
+ 34 966 105 888

www.hidroten.es

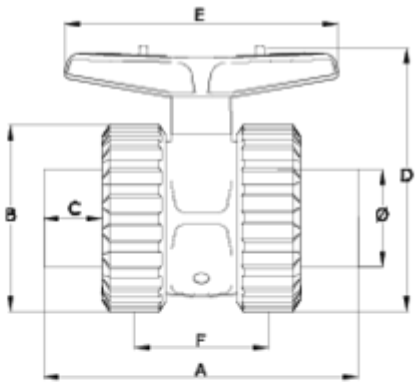

ITEM 788 | BIDIRECTIONAL BALL VALVE MALE SOLVENT SOCKET OUTLET FPM

CÓDIGO	f	PESO (g)	DN	A	B	C	D	E	F	PN	MEDIDA
11D250	20	158	15	104	55	16	74	80	44	**PN16**	MÉTRICO
11D251	25	200	20	112	62	19	80	80	49	**PN16**	MÉTRICO
11D252	32	332	25	142	72	23	103	101	66	**PN16**	MÉTRICO
11D253	40	574	32	165	88	25	125	130	71	**PN16**	MÉTRICO
11D254	50	838	40	180	103	31	138	130	75	**PN16**	MÉTRICO
11D255	63	1308	50	210	120	38	177	170	89	**PN16**	MÉTRICO

Product Documents

Product Certificates

Company Certificates







Pol. Ind. Plá Vallonga,
c/ Agua, 28
03006 ALICANTE (España)

+34 965 11 42 82
+34 965 11 48 62
tecnicocomercial@hidroten.es

Technical &
Commercial Service
+ 34 966 105 888

www.hidroten.es