Clamp saddles

Double clamp saddle 4 screws

ITEM 132



REFERENCE	DESCRIPTION	Net weight	Volumen (m^3)	Gross weight	Unidades lote
1003117	PP DOUBLE CLAMP SADDLE 110-1/2"	0,526	0,06347	21,7994	25
1003121	PP DOUBLE CLAMP SADDLE 125-1/2"	0,604	0,06150	17,892	28
1003145	PP DOUBLE CLAMP SADDLE 50-1 1/4"	0,2952	0,02244	13,824	45
1003210	PP DOUBLE CLAMP SADDLE 63-1/2"	0,262745	0,04117	16,82	60
1003211	PP DOUBLE CLAMP SADDLE 63-3/4"	0,263495	0,04117	16,865	60
1003212	PP DOUBLE CLAMP SADDLE 63-1"	0,294328	0,06149	18,715	60
1003213	PP DOUBLE CLAMP SADDLE 63-1 1/4"	0,326412	0,06347	20,64	60
1003214	PP DOUBLE CLAMP SADDLE 63-1 1/2"	0,314	0,04880	19,609	60
1003215	PP DOUBLE CLAMP SADDLE 75-1/2"	0,359	0,04460	20,184	35
1003216	PP DOUBLE CLAMP SADDLE 75-3/4"	0,336	0,04460	18,915	35
1003217	PP DOUBLE CLAMP SADDLE 75-1"	0,350574	0,06150	13,28	35
1003218	PP DOUBLE CLAMP SADDLE 75-1 1/4"	0,378	0,06150	21,459	35
1003219	PP DOUBLE CLAMP SADDLE 75-1 1/2"	0,382	0,06150	21,648	35
1003220	PP DOUBLE CLAMP SADDLE 75-2"	0,457	0,06150	22,929	35
1003221	PP DOUBLE CLAMP SADDLE 90-1/2"	0,366	0,04117	17,277	30
1003222	PP DOUBLE CLAMP SADDLE 90-3/4"	0,3829	0,04460	12,18	30
1003223	PP DOUBLE CLAMP SADDLE 90-1"	0,380503	0,06150	12,385	30
1003224	PP DOUBLE CLAMP SADDLE 90-1 1/4"	0,426503	0,06150	13,765	30
1003225	PP DOUBLE CLAMP SADDLE 90-1 1/2"	0,42117	0,06150	13,605	30
1003226	PP DOUBLE CLAMP SADDLE 90-2"	0,47767	0,06150	15,2506	30
1003227	PP DOUBLE CLAMP SADDLE 110-3/4"	0,478	0,06347	20,115	25
1003228	PP DOUBLE CLAMP SADDLE 110-1"	0,48698	0,06347	13,39	25
1003229	PP DOUBLE CLAMP SADDLE 110-1 1/4"	0,523	0,08678	21,913	25

Pol. Ind. Plá Vallonga,
c/ Agua, 28
03006 ALICANTE (España)

+34 965 11 42 82
+34 965 11 48 62
tecnicocomercial@hidroten.es

Technical &
Commercial Service
+ 34 966 105 888

www.hidroten.es

Clamp saddles

Double clamp saddle 4 screws

ITEM 132



REFERENCE	DESCRIPTION	Net weight	Volumen (m^3)	contenido.Peso bruto	Unidades lote
1003230	PP DOUBLE CLAMP SADDLE 110-1 1/2"	0,53142	0,06649	14,206	25
1003231	PP DOUBLE CLAMP SADDLE 110-2"	0,606	0,06347	20,222	20
1003232	PP DOUBLE CLAMP SADDLE 110-2 1/2"	0,748	0,06347	23,568	20
1003233	PP DOUBLE CLAMP SADDLE 125-3/4"	0,569	0,06150	16,925	28
1003234	PP DOUBLE CLAMP SADDLE 125-1"	0,620339	0,06150	18,29	28
1003235	PP DOUBLE CLAMP SADDLE 125-1 1/4"	0,622	0,06150	18,507	28
1003236	PP DOUBLE CLAMP SADDLE 125-1 1/2"	0,669268	0,06150	19,66	28
1003237	PP DOUBLE CLAMP SADDLE 125-2"	0,655	0,06150	19,277	25
1003238	PP DOUBLE CLAMP SADDLE 125-2 1/2"	0,795	0,08678	20,868	25

Pol. Ind. Plá Vallonga,
c/ Agua, 28
03006 ALICANTE (España)

+34 965 11 42 82
+34 965 11 48 62
tecnicocomercial@hidroten.es

Technical &
Commercial Service
+ 34 966 105 888

www.hidroten.es

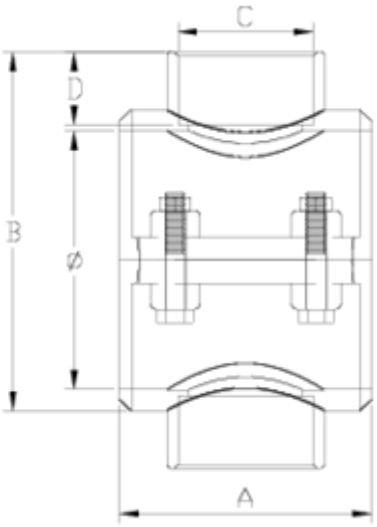

ITEM 132 | Double clamp saddle 4 screws

Código	f tubo - C	Peso (g)	A	B	D	PN	TIPO ROSCA
03145	50 - 1 1/4"	323.68	70	123	23	**PN16**	BSP
03210	63 - 1/2"	265.44	70	115	16	**PN16**	BSP
03211	63 - 3/4"	264.32	70	115	17	**PN16**	BSP
03212	63 - 1"	273.28	70	123	21	**PN16**	BSP
03213	63 - 1 1/4"	280	70	123	23	**PN16**	BSP
03214	63 - 1 1/2"	293.44	70	123	31	**PN16**	BSP
03215	75 - 1/2"	355.04	85	135	16	**PN10**	BSP
03216	75 - 3/4"	346.08	85	130	17	**PN10**	BSP
03217	75 - 1"	352.8	85	135	21	**PN10**	BSP
03218	75 - 1 1/4"	368.48	85	139	23	**PN10**	BSP

Pol. Ind. Plá Vallonga,
c/ Agua, 28
03006 ALICANTE (España)

+34 965 11 42 82
+34 965 11 48 62
tecnicocomercial@hidroten.es

Technical &
Commercial Service
+ 34 966 105 888

www.hidroten.es

ITEM 132 | Double clamp saddle 4 screws

03219	75 - 1 1/2"	370.72	85	139	31	**PN10**	BSP
03220	75 - 2"	409.92	85	147	38	**PN10**	BSP
03221	90 - 1/2"	380.8	87	144	16	**PN10**	BSP
03222	90 - 3/4"	386.4	87	144	17	**PN10**	BSP
03223	90 - 1"	393.12	87	150	21	**PN10**	BSP
03224	90 - 1 1/4"	406.56	87	154	23	**PN10**	BSP
03225	90 - 1 1/2"	413.28	87	154	31	**PN10**	BSP
03226	90 - 2"	446.88	87	162	38	**PN10**	BSP
03117	110 - 1/2"	526.4	104	164	16	**PN10**	BSP
03227	110 - 3/4"	518.56	104	164	17	**PN10**	BSP
03228	110 - 1"	537.6	104	170	21	**PN10**	BSP
03229	110 - 1 1/4"	544.32	104	180	23	**PN10**	BSP
03230	110 - 1 1/2"	555.52	104	180	31	**PN10**	BSP
03231	110 - 2"	591.36	104	182	38	**PN10**	BSP
03232	110 - 2 1/2"	669.76	104	196	44	**PN10**	BSP
03121	125 - 1/2"	660.8	101	185	16	**PN10**	BSP
03233	125 - 3/4"	623.84	101	185	17	**PN10**	BSP
03234	125 - 1"	647.36	101	189	21	**PN10**	BSP
03235	125 - 1 1/4"	650.72	101	197	23	**PN10**	BSP
03236	125 - 1 1/2"	663.04	101	197	31	**PN10**	BSP
03237	125 - 2"	670.88	101	203	38	**PN10**	BSP
03238	125 - 2 1/2"	750.4	101	223	44	**PN10**	BSP

Product Documents

Product Certificates

Company Certificates







Pol. Ind. Plá Vallonga,
c/ Agua, 28
03006 ALICANTE (España)

+34 965 11 42 82
+34 965 11 48 62
tecnicocomercial@hidroten.es

Technical &
Commercial Service
+ 34 966 105 888

www.hidroten.es