PP-RCT butterfly valves

Cream colour PP-RCT Implex butterfly manually operated

ITEM 12P



REFERENCE	DESCRIPTION	Net weight	Volumen (m^3)	Gross weight	Unidades lote
109P100	V. M. IMPLEX PP-RCT RED. MANUAL EPDM 63	2,509	0,02243	2,9967	1
109P101	V. M. IMPLEX PP-RCT RED. MANUAL EPDM 75	2,5386	0,02243	3,0263	1
109P102	V. M. IMPLEX PP-RCT RED. MANUAL EPDM 90	2,9488	0,01553	3,2755	1
109P103	V. M. IMPLEX PP-RCT RED. MANUAL EPDM 110	3,2068	0,02243	3,6945	1
109P105	V. M. IMPLEX PP-RCT RED. MANUAL EPDM 125/140	3,9415	0,02243	4,4292	1
109P106	V. M. IMPLEX PP-RCT RED. MANUAL EPDM 160	4,3656	0,03648	4,9596	1
109P107	V. M. IMPLEX PP-RCT RED. MANUAL EPDM 200	5,3849	0,06149	6,3054	1

Pol. Ind. Plá Vallonga,
c/ Agua, 28
03006 ALICANTE (España)

+34 965 11 42 82
+34 965 11 48 62
tecnicocomercial@hidroten.es

Technical &
Commercial Service
+ 34 966 105 888

www.hidroten.es

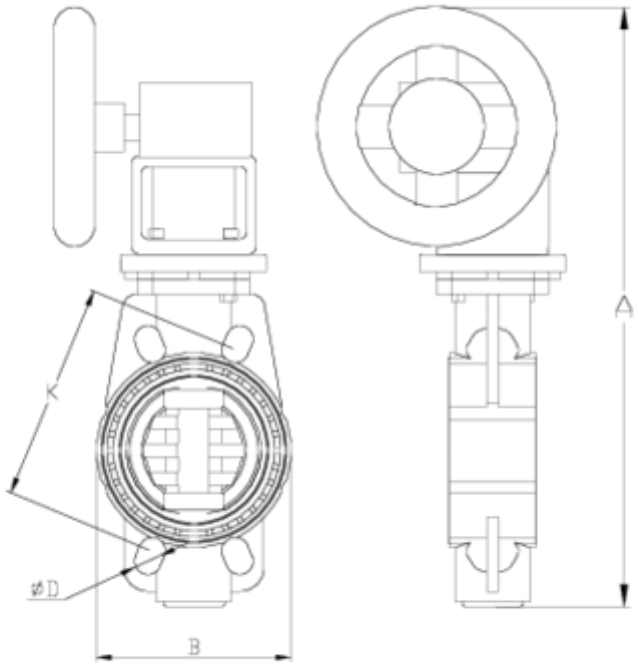

ITEM 12P | Cream colour PP-RCT Implex butterfly manually operated

CÓDIGO	Ø	DN	PESO	A	B	D	K	PN
9P100	63	65	3145	362	136	18x4	125-145	**10**
9P101	75	65	3145	362	136	18x4	125-145	**10**
9P102	90	80	3810	386	130	18x8	146-160	**10**
9P103	110	100	4070	406	152	18x8	178-190	**10**
9P105	125/140	125	4700	488	187	18x8	210-216	**10**
9P106	160	125	5530	510	214	22x8	235-241	**10**
9P107	200	200	7370	584	270	22x8	292-298	**6**

Pol. Ind. Plá Vallonga,
c/ Agua, 28
03006 ALICANTE (España)

+34 965 11 42 82
+34 965 11 48 62
tecnicocomercial@hidroten.es

Technical &
Commercial Service
+ 34 966 105 888

www.hidroten.es

Product Documents

Product Certificates

Company Certificates







Pol. Ind. Plá Vallonga,
c/ Agua, 28
03006 ALICANTE (España)

+34 965 11 42 82
+34 965 11 48 62
tecnicocomercial@hidroten.es

Technical &
Commercial Service
+ 34 966 105 888

www.hidroten.es