PP-RCT butterfly valves

Cream colour PP-RCT Implex butterfly valve pneumatic actuator S/E

ITEM 08P



REFERENCE	DESCRIPTION	Net weight	Volumen (m^3)	Gross weight	Unidades lote
109P062	V. M. IMPLEX PP-RCT ACT. NEUM. SE EPDM 63	4,67	0,03129	5,243	1
109P063	V. M. IMPLEX PP-RCT ACT. NEUM. SE EPDM 75	4,71	0,02243	5,1977	1
109P064	V. M. IMPLEX PP-RCT ACT. NEUM. SE EPDM 90	5,47	0,02243	5,9577	1
109P065	V. M. IMPLEX PP-RCT ACT. NEUM. SE EPDM 110	9,32	0,04460	10,014	1
109P067	V. M. IMPLEX PP-RCT ACT. NEUM. SE EPDM 125/140	13,05	0,06149	13,9705	1
109P068	V. M. IMPLEX PP-RCT ACT. NEUM. SE EPDM 160	13,55	0,04460	14,244	1
109P069	V. M. IMPLEX PP-RCT ACT. NEUM. SE EPDM 200	19,1	0,06149	20,0205	1

Pol. Ind. Plá Vallonga,
c/ Agua, 28
03006 ALICANTE (España)

+34 965 11 42 82
+34 965 11 48 62
tecnicocomercial@hidroten.es

Technical &
Commercial Service
+ 34 966 105 888

www.hidroten.es

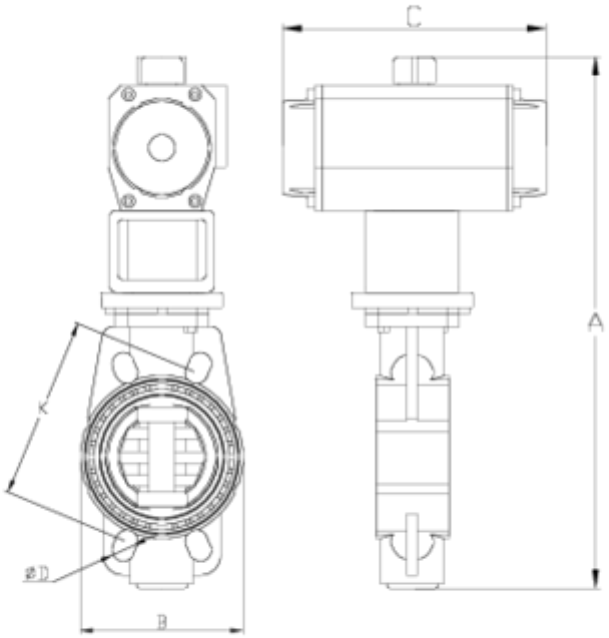

ITEM 08P | Cream colour PP-RCT Implex butterfly valve pneumatic actuator S/E

CÓDIGO	Ø	DN	PESO	A	B	C	D	K	PN
9P062	63	65	4295	376	136	210	18x4	125-145	**10**
9P063	75	65	4295	376	136	210	18x4	125-145	**10**
9P064	90	80	5186	400	130	210	18x8	146-160	**10**
9P065	110	100	8404	420	152	290	18x8	178-190	**10**
9P067	125/140	125	12636	500	187	310	18x8	210-216	**10**
9P068	160	125	13758	522	214	310	22x8	235-241	**10**
9P069	200	200	17520	596	270	362	22x8	292-298	**6**

Pol. Ind. Plá Vallonga,
c/ Agua, 28
03006 ALICANTE (España)

+34 965 11 42 82
+34 965 11 48 62
tecnicocomercial@hidroten.es

Technical &
Commercial Service
+ 34 966 105 888

www.hidroten.es

Product Documents

Product Certificates

Company Certificates







Pol. Ind. Plá Vallonga,
c/ Agua, 28
03006 ALICANTE (España)

+34 965 11 42 82
+34 965 11 48 62
tecnicocomercial@hidroten.es

Technical &
Commercial Service
+ 34 966 105 888

www.hidroten.es