PP-RCT butterfly valves

Cream colour PP-RCT Implex catch handle butterfly valve

ITEM 02P



REFERENCE	DESCRIPTION	Net weight	Volumen (m^3)	Gross weight	Unidades lote
109P000	PPR CT EPDM IMPLEX VALVE 63	1,243975	0,03129	5,79	4
109P001	V. M. IMPLEX PP-RCT GATILLO 75	1,30175	0,03129	5,78	4
109P002	V. M. IMPLEX PP-RCT GATILLO 90	1,914	0,04460	8,35	4
109P003	V. M. IMPLEX PP-RCT GATILLO 110	2,13825	0,04460	9,247	4
109P005	V. M. IMPLEX PP-RCT GATILLO 125/140	2,4307	0,06347	11,64	4
109P006	V. M. IMPLEX PP-RCT GATILLO 160	3,0367	0,06347	14,064	4
109P007	V. M. IMPLEX PP-RCT GATILLO 200	4,6923	0,02243	5,18	1

Pol. Ind. Plá Vallonga,
c/ Agua, 28
03006 ALICANTE (España)

+34 965 11 42 82
+34 965 11 48 62
tecnicocomercial@hidroten.es

Technical &
Commercial Service
+ 34 966 105 888

www.hidroten.es

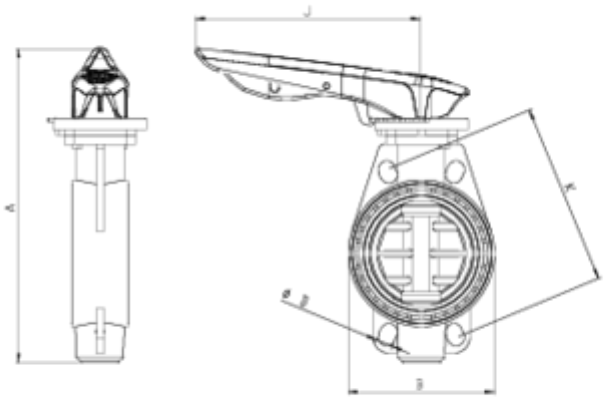

ITEM 02P | Cream colour PP-RCT Implex catch handle butterfly valve

CÓDIGO	Ø	PESO	A	B	C	D	K	J	PN	MEDIDA
9P000	63	1395	272	136	50	18x4	125-145	236	**PN10**	MÉTRICO
9P001	75	1395	272	136	50	18x4	125-145	236	**PN10**	MÉTRICO
9P002	90	2060	296	130	57	18x8	146-160	236	**PN10**	MÉTRICO
9P003	110	2320	316	152	60	18x8	178-190	236	**PN10**	MÉTRICO
9P005	125/140	2950	366	187	65	18x8	210-216	271	**PN10**	MÉTRICO
9P006	160	3780	388	214	69	22x8	235-241	271	**PN10**	MÉTRICO
9P007	200	5620	451	270	71	22x8	292-298	316	**PN6**	MÉTRICO

Pol. Ind. Plá Vallonga,
c/ Agua, 28
03006 ALICANTE (España)

+34 965 11 42 82
+34 965 11 48 62
tecnicocomercial@hidroten.es

Technical &
Commercial Service
+ 34 966 105 888

www.hidroten.es

Product Documents

Product Certificates

Company Certificates







Pol. Ind. Plá Vallonga,
c/ Agua, 28
03006 ALICANTE (España)

+34 965 11 42 82
+34 965 11 48 62
tecnicocomercial@hidroten.es

Technical &
Commercial Service
+ 34 966 105 888

www.hidroten.es