PP-RCT butterfly valves

Green colour PP-RCT Implex butterfly manually operated

ITEM 11P



REFERENCE	DESCRIPTION	Net weight	Volumen (m^3)	Gross weight	Unidades lote
109P300	V. M. IMPLEX PP-RCT RED. MANUAL EPDM 63 VERDE	2,4971	0,02243	2,9848	1
109P301	V. M. IMPLEX PP-RCT RED. MANUAL EPDM 75 VERDE	2,5171	0,02243	3,0048	1
109P302	V. M. IMPLEX PP-RCT RED. MANUAL EPDM 90 VERDE	2,9388	0,01553	3,2655	1
109P303	V. M. IMPLEX PP-RCT RED. MANUAL EPDM 110 VERDE	3,2043	0,02243	3,692	1
109P305	V. M. IMPLEX PP-RCT RED. MANUAL EPDM 125/140 VERDE	4,9596	0,02243	4,4292	1
109P306	V. M. IMPLEX PP-RCT RED. MANUAL EPDM 160 VERDE	4,3656	0,03648	4,9596	1
109P307	V. M. IMPLEX PP-RCT RED. MANUAL EPDM 200 VERDE	6,4654	0,06649	7,3859	1

Pol. Ind. Plá Vallonga,
c/ Agua, 28
03006 ALICANTE (España)

+34 965 11 42 82
+34 965 11 48 62
tecnicocomercial@hidroten.es

Technical &
Commercial Service
+ 34 966 105 888

www.hidroten.es

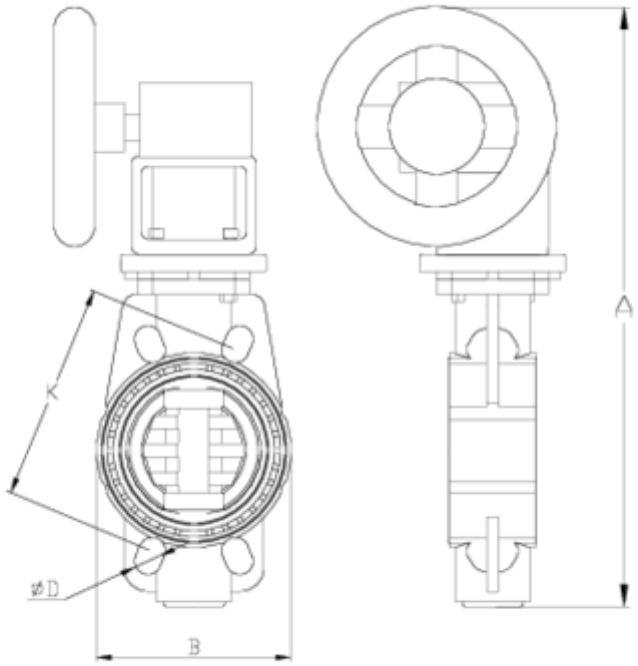

ITEM 11P | Green colour PP-RCT Implex butterfly manually operated

CÓDIGO	Ø	DN	PESO	A	B	D	K	PN
9P300	63	65	3145	362	136	18x4	125-145	**10**
9P301	75	65	3145	362	136	18x4	125-145	**10**
9P302	90	80	3810	386	130	18x8	146-160	**10**
9P303	110	100	4070	406	152	18x8	178-190	**10**
9P305	125/140	125	4700	488	187	18x8	210-216	**10**
9P306	160	125	5530	510	214	22x8	235-241	**10**
9P307	200	200	7370	584	270	22x8	292-298	**6**

Pol. Ind. Plá Vallonga,
c/ Agua, 28
03006 ALICANTE (España)

+34 965 11 42 82
+34 965 11 48 62
tecnicocomercial@hidroten.es

Technical &
Commercial Service
+ 34 966 105 888

www.hidroten.es

Product Documents

Product Certificates

Company Certificates







Pol. Ind. Plá Vallonga,
c/ Agua, 28
03006 ALICANTE (España)

+34 965 11 42 82
+34 965 11 48 62
tecnicocomercial@hidroten.es

Technical &
Commercial Service
+ 34 966 105 888

www.hidroten.es