PP-RCT butterfly valves

Green colour PP-RCT Implex butterfly valve pneumatic actuator D/E

ITEM 09P



REFERENCE	DESCRIPTION	Net weight	Volumen (m^3)	Gross weight	Unidades lote

Pol. Ind. Plá Vallonga,
c/ Agua, 28
03006 ALICANTE (España)

+34 965 11 42 82
+34 965 11 48 62
tecnicocomercial@hidroten.es

Technical &
Commercial Service
+ 34 966 105 888

www.hidroten.es

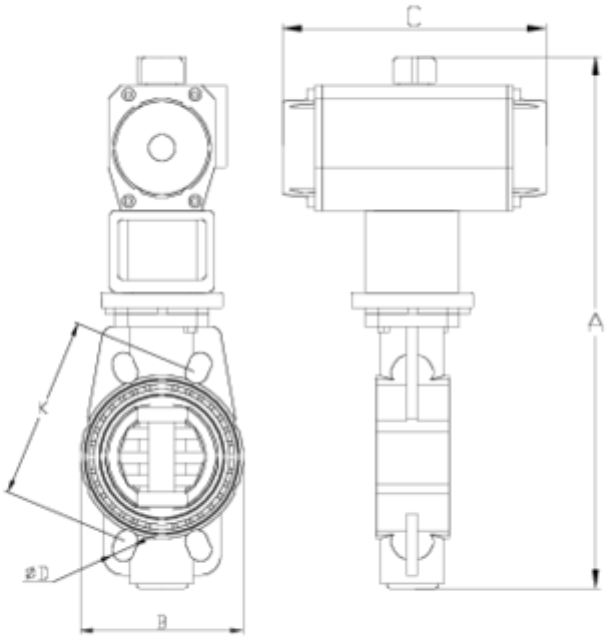

ITEM 09P | Green colour PP-RCT Implex butterfly valve pneumatic actuator D/E

CÓDIGO	Ø	DN	PESO	A	B	C	D	K	PN
9P275	63	65	4295	376	136	210	18x4	125-145	**10**
9P276	75	65	4295	376	136	210	18x4	125-145	**10**
9P277	90	80	5186	400	130	210	18x8	146-160	**10**
9P278	110	100	8404	420	152	290	18x8	178-190	**10**
9P280	125/140	125	12636	500	187	310	18x8	210-216	**10**
9P281	160	125	13758	522	214	310	22x8	235-241	**10**
9P282	200	200	17520	596	270	362	22x8	292-298	**6**

Pol. Ind. Plá Vallonga,
c/ Agua, 28
03006 ALICANTE (España)

+34 965 11 42 82
+34 965 11 48 62
tecnicocomercial@hidroten.es

Technical &
Commercial Service
+ 34 966 105 888

www.hidroten.es

Product Documents

Product Certificates

Company Certificates





Pol. Ind. Plá Vallonga,
c/ Agua, 28
03006 ALICANTE (España)

+34 965 11 42 82
+34 965 11 48 62
tecnicocomercial@hidroten.es

Technical &
Commercial Service
+ 34 966 105 888

www.hidroten.es