Butterfly valves

Implex butterfly valve flanges with manual reductor Ø355

ITEM 187XL



REFERENCE	DESCRIPTION	Net weight	Volumen (m^3)	Gross weight	Unidades lote
1009652		55,7	0,36961	59,7	1

Pol. Ind. Plá Vallonga,
c/ Agua, 28
03006 ALICANTE (España)

+34 965 11 42 82
+34 965 11 48 62
tecnicocomercial@hidroten.es

Technical &
Commercial Service
+ 34 966 105 888

www.hidroten.es

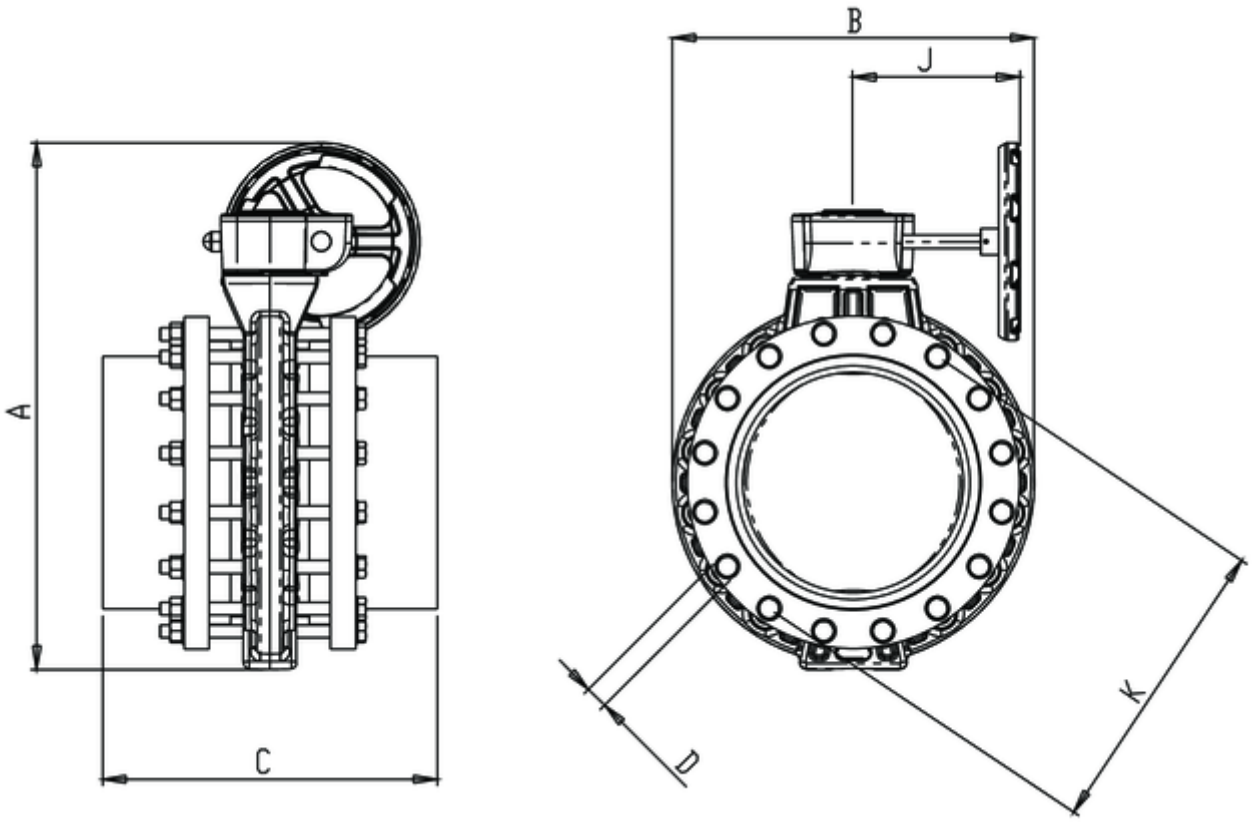

ITEM 187XL | Implex butterfly valve flanges with manual reductor Ø355

CÓDIGO	Ø	A	B	C	D	K	J	PN	MEDIDA
1009652	355	800	550	516	22x16	431-480	254	**PN6**	MÉTRICO

Pol. Ind. Plá Vallonga,
c/ Agua, 28
03006 ALICANTE (España)

+34 965 11 42 82
+34 965 11 48 62
tecnicocomercial@hidroten.es

Technical &
Commercial Service
+ 34 966 105 888

www.hidroten.es

Product Documents

TECHNICAL FAMILY

Product Certificates



Company Certificates













Pol. Ind. Plá Vallonga,
c/ Agua, 28
03006 ALICANTE (España)

+34 965 11 42 82
+34 965 11 48 62
tecnicocomercial@hidroten.es

Technical &
Commercial Service
+ 34 966 105 888

www.hidroten.es