Butterfly valves

Implex valve manually operated - FPM seal

ITEM 772



REFERENCE	DESCRIPTION	Net weight	Volumen (m^3)	Gross weight	Unidades lote
1009214	PVC FPM WHEEL GEAR BOX 63	2,512	0,02244	2,9997	1
1009215	PVC FPM WHEEL GEAR BOX 75	2,515	0,04460	3,2449	1
1009434	PVC FPM IMPLEX V. GEAR BOX 90	3,81	0,04460	4,5399	1
1009435	PVC FPM IMPLEX V. GEAR BOX 110	4,07	0,04460	4,7358	1
1009436	PVC FPM IMPLEX V. GEAR BOX 125	4,375	0,04460	5,0408	1
1009437	PVC FPM IMPLEX V. GEAR BOX 140	4,7	0,06150	5,5435	1
1009438	PVC FPM IMPLEX V. GEAR BOX 160	5,523	0,03648	6,3665	1
1009221	PVC FPM WHEEL GEAR BOX 200/225	6,392	0,06150	7,414	1
1009222	PVC FPM WHEEL GEAR BOX 250	14,55	0,13096	15,71	1
1009223	PVC FPM IMPLEX V. GEAR BOX 315	20,8	0,06879	21,51	1

Pol. Ind. Plá Vallonga,
c/ Agua, 28
03006 ALICANTE (España)

+34 965 11 42 82
+34 965 11 48 62
tecnicocomercial@hidroten.es

Technical &
Commercial Service
+ 34 966 105 888

www.hidroten.es

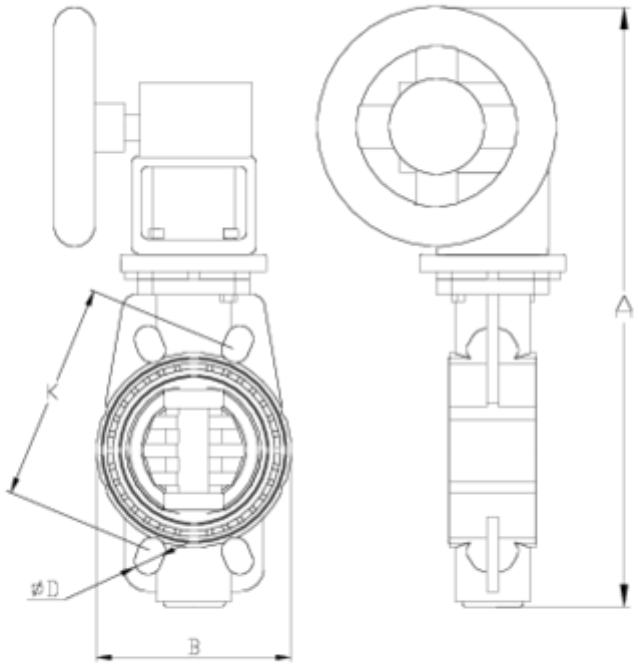

ITEM 772 | Implex valve manually operated - FPM seal

CÓDIGO	f	PESO	A	B	D	K	PN	MEDIDA
09214	63	3145	362	136	18x4	125-145	**PN10**	MÉTRICO
09215	75	3145	362	136	18x4	125-145	**PN10**	MÉTRICO
09434	90	3810	386	130	18x8	146-160	**PN10**	MÉTRICO
09435	110	4070	406	152	18x8	178-190	**PN10**	MÉTRICO
09436	125	4375	417	170	18x8	190	**PN10**	MÉTRICO
09437	140	4700	488	187	18x8	210-216	**PN10**	MÉTRICO
09438	160	5530	510	214	22x8	235-241	**PN10**	MÉTRICO
09221	200/225	7370	584	270	22x8	292-298	**PN6**	MÉTRICO
09222	250	14550	610	321	22x12	350-362	**PN6**	MÉTRICO
09223	315	22000	695	370	22x12	400-432	**PN6**	MÉTRICO

Pol. Ind. Plá Vallonga,
c/ Agua, 28
03006 ALICANTE (España)

+34 965 11 42 82
+34 965 11 48 62
tecnicocomercial@hidroten.es

Technical &
Commercial Service
+ 34 966 105 888

www.hidroten.es

ITEM 772 | Implex valve manually operated - FPM seal

09224	400	31600	820	580	26x16	515	**PN6**	MÉTRICO

Pol. Ind. Plá Vallonga,
c/ Agua, 28
03006 ALICANTE (España)

+34 965 11 42 82
+34 965 11 48 62
tecnicocomercial@hidroten.es

Technical &
Commercial Service
+ 34 966 105 888

www.hidroten.es

Product Documents

Product Certificates



Company Certificates













Pol. Ind. Plá Vallonga,
c/ Agua, 28
03006 ALICANTE (España)

+34 965 11 42 82
+34 965 11 48 62
tecnicocomercial@hidroten.es

Technical &
Commercial Service
+ 34 966 105 888

www.hidroten.es