Butterfly valves

Implex valve pneumatic actuator d/e - EPDM seal

ITEM 769



REFERENCE	DESCRIPTION	Net weight	Volumen (m^3)	Gross weight	Unidades lote
1009119	DOUBLE EFFECT PNEUMATIC VALVE 63	4,493	0,01553	4,819	1
1009120	DOUBLE EFFECT PNEUMATIC VALVE 75	4,357	0,02243	4,85	1
1009179	DOUBLE EFFECT PNEUMATIC VALVE 90	4,8323	0,02244	5,32	1
1009180	DOUBLE EFFECT PNEUMATIC VALVE 110	5,1473	0,03648	5,7413	1
1009181	DOUBLE EFFECT PNEUMATIC VALVE 125	5,2921	0,04460	6,022	1
1009182	DOUBLE EFFECT PNEUMATIC VALVE 140	8,069	0,03648	8,663	1
1009183	DOUBLE EFFECT PNEUMATIC VALVE 160	7,6145	0,06150	8,535	1
1009126	DOUBLE EFFECT PNEUMATIC VALVE 200/225	11,5995	0,06150	12,52	1
1009127	DOUBLE EFFECT PNEUMATIC VALVE 250	19,582	0,08678	21,622	1
1009128	DOUBLE EFFECT PNEUMATIC VALVE 315	31,79	0,06879	32,51	1
1009269	DOUBLE EFFECT PNEUMATIC VALVE 355	64,5	0,36961	67,98	1
1009129	DOUBLE EFFECT PNEUMATIC VALVE 400	77,2	0,36961	80,68	1

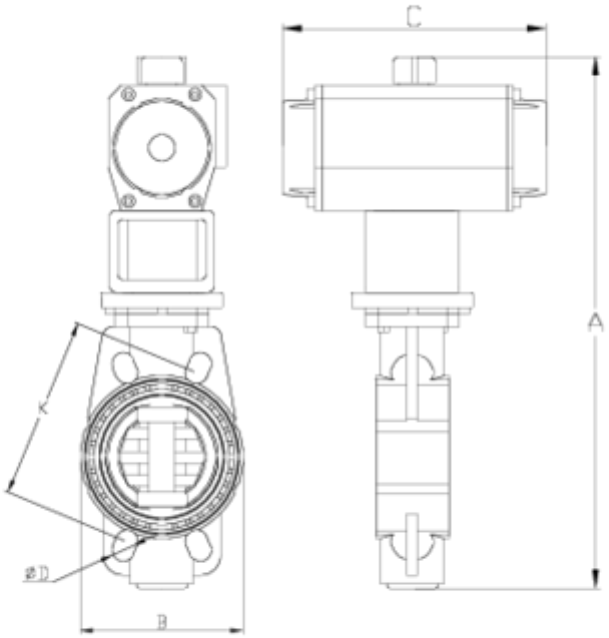

ITEM 769 | Implex valve pneumatic actuator d/e - EPDM seal

CÓDIGO	f	PESO	A	B	C	D	K	PN	MEDIDA
09119	63	4295	376	136	210	18x4	125-145	**PN10**	MÉTRICO
09120	75	4295	376	136	210	18x4	125-145	**PN10**	MÉTRICO
09179	90	5186	400	130	210	18x8	146-160	**PN10**	MÉTRICO
09180	110	5504	420	152	210	18x8	178-190	**PN10**	MÉTRICO
09181	125	5932	431	170	210	18x8	190	**PN10**	MÉTRICO
09182	140	7636	500	187	228	18x8	210-216	**PN10**	MÉTRICO
09183	160	8758	522	214	228	22x8	235-241	**PN10**	MÉTRICO
09126	200/225	14820	596	270	290	22x8	292-298	**PN6**	MÉTRICO
09127	250	19182	596	321	310	22x12	350-362	**PN6**	MÉTRICO
09128	315	31500	770	370	310	22x12	400-432	**PN6**	MÉTRICO

Pol. Ind. Plá Vallonga,
c/ Agua, 28
03006 ALICANTE (España)

+34 965 11 42 82
+34 965 11 48 62
tecnicocomercial@hidroten.es

Technical &
Commercial Service
+ 34 966 105 888

www.hidroten.es

ITEM 769 | Implex valve pneumatic actuator d/e - EPDM seal

09129	400	54200	925	580	422	26x16	515	**PN6**	MÉTRICO

Pol. Ind. Plá Vallonga,
c/ Agua, 28
03006 ALICANTE (España)

+34 965 11 42 82
+34 965 11 48 62
tecnicocomercial@hidroten.es

Technical &
Commercial Service
+ 34 966 105 888

www.hidroten.es

Product Documents

Product Certificates



Company Certificates













Pol. Ind. Plá Vallonga,
c/ Agua, 28
03006 ALICANTE (España)

+34 965 11 42 82
+34 965 11 48 62
tecnicocomercial@hidroten.es

Technical &
Commercial Service
+ 34 966 105 888

www.hidroten.es