Butterfly valves

Implex valve, pneumatic actuator SE

ITEM 768



REFERENCE	DESCRIPTION	Net weight	Volumen (m^3)	Gross weight	Unidades lote
1009109	SINGLE EFFECT PNEUMATIC BUTTERFLY V. 63	4,668	0,03129	5,241	1
1009110	SINGLE EFFECT PNEUMATIC BUTTERFLY V. 75	4,295	0,02243	4,785	1
1009873	SINGLE EFFECT PNEUMATIC BUTTERFLY V.90	5,2263	0,02243	5,714	1
1009874	SINGLE EFFECT PNEUMATIC BUTTERFLY V.110	9,7051	0,04460	10,435	1
1009875	SINGLE EFFECT PNEUMATIC BUTTERFLY V.125	9,333	0,06150	10,313	1
1009876	SINGLE EFFECT PNEUMATIC BUTTERFLY V. 140	12,636	0,06150	13,4795	1
1009877	SINGLE EFFECT PNEUMATIC BUTTERFLY V. 160	14,4331	0,04460	15,163	1
1009116	SINGLE EFFECT PNEUMATIC BUTTERFLY V. 200/225	20,9895	0,06150	21,91	1
1009117	SINGLE EFFECT PNEUMATIC BUTTERFLY V. 250	25,5146	0,06879	27,13	1
1009118	SINGLE EFFECT PNEUMATIC BUTTERFLY V. 315	33,145	0,16000	35,6	1
1009228	SINGLE EFFECT PNEUMATIC BUTTERFLY V. PPR 355	96,5	0,36961	100,5	1
1009130	SINGLE EFFECT PNEUMATIC BUTTERFLY V. PPR 400	108	0,36961	111,48	1

Pol. Ind. Plá Vallonga,
c/ Agua, 28
03006 ALICANTE (España)

+34 965 11 42 82
+34 965 11 48 62
tecnicocomercial@hidroten.es

Technical &
Commercial Service
+ 34 966 105 888

www.hidroten.es

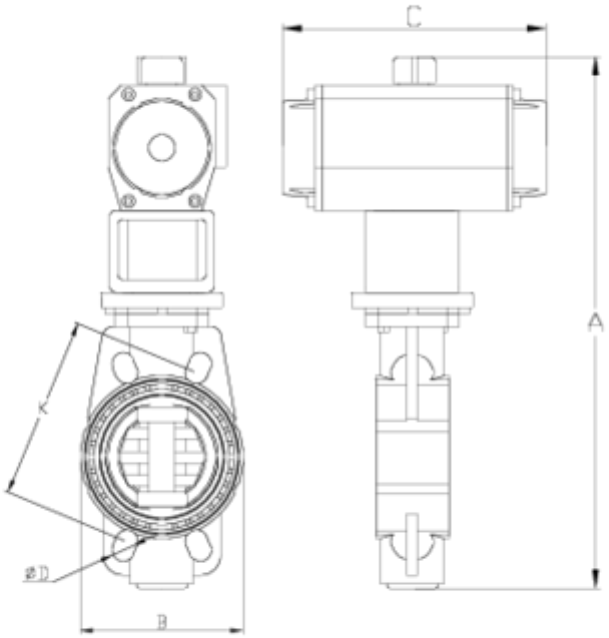

ITEM 768 | Implex valve, pneumatic actuator SE

CÓDIGO	f	PESO	A	B	C	D	K	PN	MEDIDA
09109	63	4295	376	136	210	18x4	125-145	**PN10**	MÉTRICO
09110	75	4295	376	136	210	18x4	125-145	**PN10**	MÉTRICO
09873	90	5186	400	130	210	18x8	146-160	**PN10**	MÉTRICO
09874	110	8404	420	152	290	18x8	178-190	**PN10**	MÉTRICO
09875	125	8832	431	170	290	18x8	190	**PN10**	MÉTRICO
09876	140	12636	500	187	310	18x8	210-216	**PN10**	MÉTRICO
09877	160	13758	522	214	310	22x8	235-241	**PN10**	MÉTRICO
09116	200/225	17520	596	270	362	22x8	292-298	**PN6**	MÉTRICO
09117	250	21882	596	321	362	22x12	350-362	**PN6**	MÉTRICO
09118	315	31500	770	370	362	22x12	400-432	**PN6**	MÉTRICO

Pol. Ind. Plá Vallonga,
c/ Agua, 28
03006 ALICANTE (España)

+34 965 11 42 82
+34 965 11 48 62
tecnicocomercial@hidroten.es

Technical &
Commercial Service
+ 34 966 105 888

www.hidroten.es

ITEM 768 | Implex valve, pneumatic actuator SE

09130	400	65800	925	580	468	26x16	515	**PN6**	MÉTRICO

Pol. Ind. Plá Vallonga,
c/ Agua, 28
03006 ALICANTE (España)

+34 965 11 42 82
+34 965 11 48 62
tecnicocomercial@hidroten.es

Technical &
Commercial Service
+ 34 966 105 888

www.hidroten.es

Product Documents

Product Certificates



Company Certificates













Pol. Ind. Plá Vallonga,
c/ Agua, 28
03006 ALICANTE (España)

+34 965 11 42 82
+34 965 11 48 62
tecnicocomercial@hidroten.es

Technical &
Commercial Service
+ 34 966 105 888

www.hidroten.es