Butterfly valves

Implex valve with electric actuator / Epdm

ITEM 766



REFERENCE	DESCRIPTION	Net weight	Volumen (m^3)	Gross weight	Unidades lote
1009099	IMPLEX VALVE MOTORIZED Ø63 24-240V	3,2881	0,03100	3,645	1
1009100	IMPLEX VALVE MOTORIZED Ø75 24-240V	3,4981	0,04460	3,855	1
1009862	IMPLEX VALVE MOTORIZED Ø90 24-240V	4,3	0,04460	5,206	1
1009863	IMPLEX VALVE MOTORIZED Ø110 24-240V	4,7401	0,04460	5,47	1
1009864	IMPLEX VALVE MOTORIZED Ø125 24-240V	5,1895	0,04460	5,8835	1
1009865	IMPLEX VALVE MOTORIZED Ø140	8,5745	0,06150	9,495	1
1009866	IMPLEX VALVE MOTORIZED Ø160 240V	8,9783	0,08678	10	1
1009106	IMPLEX VALVE MOTORIZED Ø200/225	11,444	0,16000	13,899	1
1009107	IMPLEX VALVE MOTORIZED Ø250 24-240V	16,7536	0,16000	19,2086	1
1009108	IMPLEX VALVE MOTORIZED Ø315 24-240V	22,429	0,16000	27,339	1
1009226	"IMPLEX" VALVE MOTORIZED 220V 355	66,5	0,36961	70	1
1009210	"IMPLEX" VALVE MOTORIZED 220V 400	55,4	0,36961	56,6	1

Pol. Ind. Plá Vallonga,
c/ Agua, 28
03006 ALICANTE (España)

+34 965 11 42 82
+34 965 11 48 62
tecnicocomercial@hidroten.es

Technical &
Commercial Service
+ 34 966 105 888

www.hidroten.es

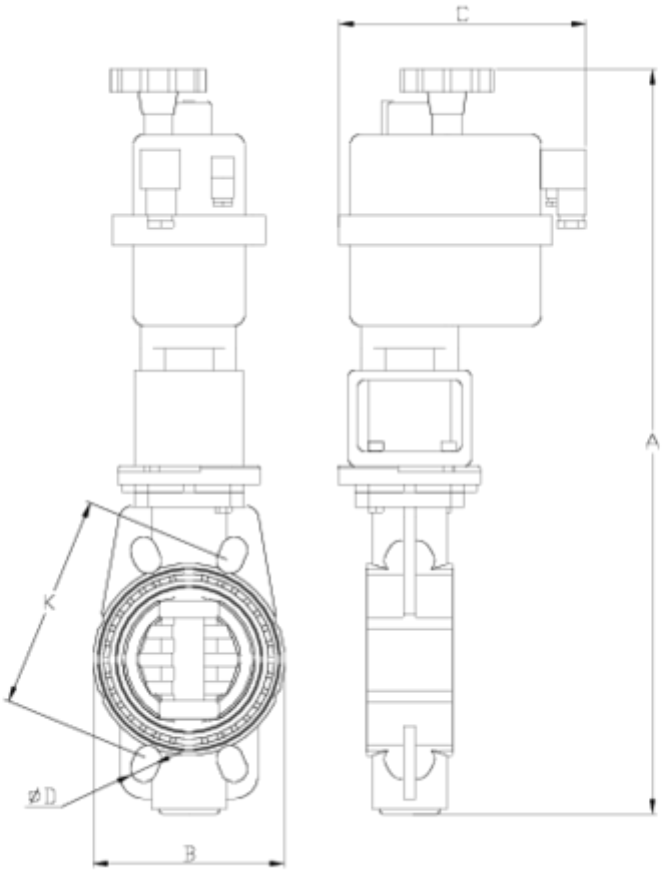

ITEM 766 | Implex valve with electric actuator / Epdm

CÓDIGO	f	PESO	A	B	C	D	K	PN	MEDIDA
09099	63	2695	453	136	177	18x4	125-145	**PN10**	MÉTRICO
09100	75	2695	453	136	177	18x4	125-145	**PN10**	MÉTRICO
09862	90	4086	477	130	177	18x8	146-160	**PN10**	MÉTRICO
09863	110	4404	497	152	177	18x8	178-190	**PN10**	MÉTRICO
09864	125	6030	563	170	177	18x8	190	**PN10**	MÉTRICO
09865	140	8636	583	187	235	18x8	210-216	**PN10**	MÉTRICO
09866	160	9758	605	214	235	22x8	235-241	**PN10**	MÉTRICO
09106	200/225	10820	679	270	235	22x8	292-298	**PN6**	MÉTRICO
09107	250	15182	755	321	235	22x12	350-362	**PN6**	MÉTRICO
09108	315	27200	790	370	235	22x12	400-432	**PN6**	MÉTRICO

Pol. Ind. Plá Vallonga,
c/ Agua, 28
03006 ALICANTE (España)

+34 965 11 42 82
+34 965 11 48 62
tecnicocomercial@hidroten.es

Technical &
Commercial Service
+ 34 966 105 888

www.hidroten.es

ITEM 766 | Implex valve with electric actuator / Epdm

09210	400	51200	950	580	380	26x16	515	**PN6**	MÉTRICO

Pol. Ind. Plá Vallonga,
c/ Agua, 28
03006 ALICANTE (España)

+34 965 11 42 82
+34 965 11 48 62
tecnicocomercial@hidroten.es

Technical &
Commercial Service
+ 34 966 105 888

www.hidroten.es

Product Documents

Product Certificates



Company Certificates













Pol. Ind. Plá Vallonga,
c/ Agua, 28
03006 ALICANTE (España)

+34 965 11 42 82
+34 965 11 48 62
tecnicocomercial@hidroten.es

Technical &
Commercial Service
+ 34 966 105 888

www.hidroten.es