PVC-U pressure fittings

"AIR L" 90° elbow, female threaded outlet

ITEM 206



REFERENCE	DESCRIPTION	Net weight	Volumen (m^3)	Gross weight	Unidades lote
1001613	"AIR L" 90º ELBOW S. SOCKET 50-3/4"	0,168577	0,02243	5,545	30
1001614	"AIR L" 90º ELBOW S. SOCKET 63-3/4"	0,297124	0,03129	8,945	30
1001615	"AIR L" 90º ELBOW S. SOCKET 50-1/2"	0,16191	0,02244	5,345	30
1001616	"AIR L" 90º ELBOW S. SOCKET OUTLET 63-1/2"	0,2969	0,03129	9,48	30
1001617	"AIR L" 90º ELBOW S. SOCKET OUTLET 75-1/2"	0,468528	0,04717	12,355	25
1001619	"AIR L" 90º ELBOW S. SOCKET OUTLET 90-3/4"	0,75558	0,03682	8,105	10
1001623	"AIR L" 90º ELBOW S. SOCKET OUTLET 110-1"	1,25597	0,04880	13,135	10

Pol. Ind. Plá Vallonga,
c/ Agua, 28
03006 ALICANTE (España)

+34 965 11 42 82
+34 965 11 48 62
tecnicocomercial@hidroten.es

Technical &
Commercial Service
+ 34 966 105 888

www.hidroten.es

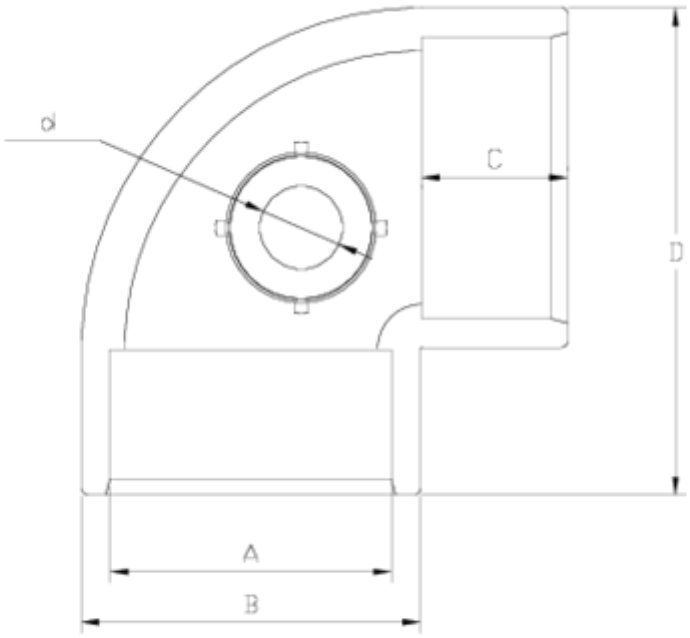

ITEM 206 | "AIR L" 90° elbow, female threaded outlet

Código	A	d	Peso (g)	B	C	D	PN	MEDIDA
01615	50	1/2"	148	61	31	88	PN10	BSP
01613	50	3/4"	152	61	31	88	PN10	BSP
01616	63	1/2"	235	76	38	109	PN10	BSP
01614	63	3/4"	240	76	38	109	PN10	BSP
01617	75	1/2"	455	90	44	130	PN10	BSP
01619	90	3/4"	815	108	51	151	PN10	BSP
01623	110	1"	1265	143	61	184	PN10	BSP

Product Documents

Product Certificates

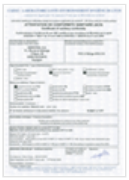





Company Certificates













Pol. Ind. Plá Vallonga,
c/ Agua, 28
03006 ALICANTE (España)

+34 965 11 42 82
+34 965 11 48 62
tecnicocomercial@hidroten.es

Technical &
Commercial Service
+ 34 966 105 888

www.hidroten.es