Angle seat valves and filters

Rotary control valve solvent socket outlet

ITEM 968

REFERENCE	DESCRIPTION	Net weight	Volumen (m^3)	Gross weight	Unidades lote
1021151	FREE NUT REGULATOR VALVE,SOLV. SOCKET 20-3/4"	0,11875	0,00437	1,31	10



Pol. Ind. Plá Vallonga,
c/ Agua, 28
03006 ALICANTE (España)

+34 965 11 42 82
+34 965 11 48 62
tecnicocomercial@hidroten.es

Technical &
Commercial Service
+ 34 966 105 888

www.hidroten.es

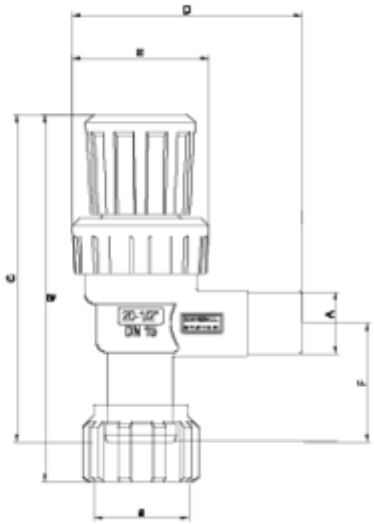

ITEM 968 | Rotary control valve solvent socket outlet

CÓDIGO	D(tubo) A-a	DN	Peso (g)	B	C	D	E	F	PN	TIPO ROSCA
21151	20-3/4"	15	136	118	105	73	43	38	**PN16**	BSP

Pol. Ind. Plá Vallonga,
c/ Agua, 28
03006 ALICANTE (España)

+34 965 11 42 82
+34 965 11 48 62
tecnicocomercial@hidroten.es

Technical &
Commercial Service
+ 34 966 105 888

www.hidroten.es

Product Documents

Product Certificates

Company Certificates







Pol. Ind. Plá Vallonga,
c/ Agua, 28
03006 ALICANTE (España)

+34 965 11 42 82
+34 965 11 48 62
tecnicocomercial@hidroten.es

Technical &
Commercial Service
+ 34 966 105 888

www.hidroten.es