Pipe clips / PVC-U solvent cement and cleaning fluids

Closed pipe clip

ITEM 882



REFERENCE	DESCRIPTION	Net weight	Volumen (m^3)	Gross weight	Unidades lote
1091425	PIPE CLIP W/RETAINING. CLIP 50	0,0293	0,01553	2,09	60
1091426	PIPE CLIP W/RETAINING. CLIP 63	0,0404	0,01553	1,95	40
1091427	PIPE CLIP W/RETAINING. CLIP 75	0,068	0,01553	2,375	30
1091428	PIPE CLIP W/RETAINING. CLIP 90	0,1119	0,01553	2,572	20
1091429	PIPE CLIP W/RETAINING. CLIP 110	0,1457	0,01553	2,52	15
1091430	PIPE CLIP W/RETAINING. CLIP 125	0,1478	0,02243	2,712	15
1091431	PIPE CLIP W/RETAINING. CLIP 140	0,2114	0,01553	2,4407	10
1091432	PIPE CLIP W/RETAINING. CLIP 160	0,25343	0,02244	3,03	10
1091433	PIPE CLIP W/RETAINING. CLIP 200	0,4288	0,02243	3,765	8
1091434	PIPE CLIP W/RETAINING. CLIP 225	0,53975	0,01553	2,74	4
1091435	PIPE CLIP W/RETAINING. CLIP 250	0,75145	0,02457	3,563	4
1091436	PIPE CLIP W/RETAINING. CLIP 315	1,18745	0,04836	3,2049	2

Pol. Ind. Plá Vallonga,
c/ Agua, 28
03006 ALICANTE (España)

+34 965 11 42 82
+34 965 11 48 62
tecnicocomercial@hidroten.es

Technical &
Commercial Service
+ 34 966 105 888

www.hidroten.es

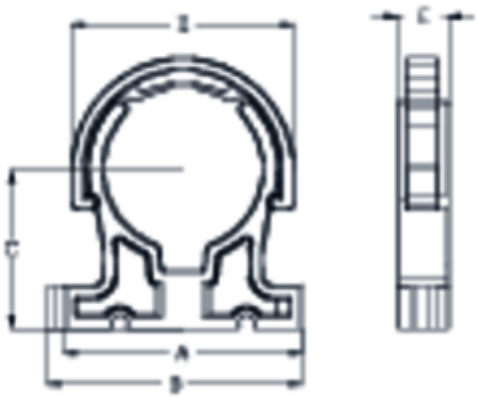

ITEM 882 | Closed pipe clip

Código	d	Peso (g)	A	B	C	D	E
91425	50	30	75	80	50	68	16
91426	63	40	90	95	60	85	16
91427	75	68	105	110	70	98	20
91428	90	112	130	135	90	116	24
91429	110	146	150	155	90	142	24
91430	125	148	165	170	95	153	26
91431	140	211	210	215	105	175	28
91432	160	253	235	240	115	195	28
91433	200	428	275	280	142	238	31
91434	225	539	310	315	159	281	33

ITEM 882 | Closed pipe clip

91435	250	751	343	348	177	312	36
91436	315	1187	433	438	214	392	36

Pol. Ind. Plá Vallonga,
c/ Agua, 28
03006 ALICANTE (España)

+34 965 11 42 82
+34 965 11 48 62
tecnicocomercial@hidroten.es

Technical &
Commercial Service
+ 34 966 105 888

www.hidroten.es

Product Documents

Product Certificates

Company Certificates







Pol. Ind. Plá Vallonga,
c/ Agua, 28
03006 ALICANTE (España)

+34 965 11 42 82
+34 965 11 48 62
tecnicocomercial@hidroten.es

Technical &
Commercial Service
+ 34 966 105 888

www.hidroten.es