Netvitc System® Filters

Vertical stone strainer solvent socket outlet

ITEM 929

REFERENCE	DESCRIPTION	Net weight	Volumen (m^3)	Gross weight	Unidades lote
108N901	SNS FILTER VERTICAL STONE SOLVENT SOCKET/O 90	3,99	0,06149	8,9	2
108N902	SNS FILTER VERTICAL STONE SOLVENT SOCKET/O 110	5,45	0,06149	6,37	1



Pol. Ind. Plá Vallonga,
c/ Agua, 28
03006 ALICANTE (España)

+34 965 11 42 82
+34 965 11 48 62
tecnicocomercial@hidroten.es

Technical &
Commercial Service
+ 34 966 105 888

www.hidroten.es

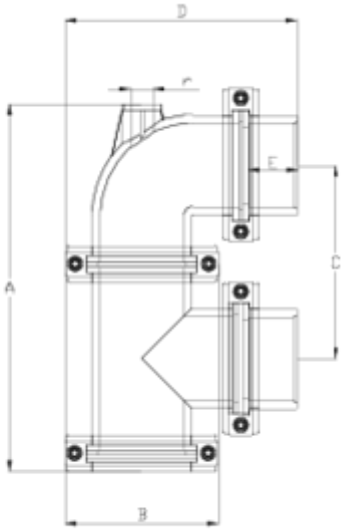

ITEM 929 | Vertical stone strainer solvent socket outlet

CÓDIGO	Ø	PESOS	Brida SNS	A	B	C	D	E	r	PN	MEDIDA
8N901	90	3910	90	397	164	210	254	52	3/4"	**PN10**	MÉTRICO
8N902	110	5449	110	456	188	245	283	61	1"	**PN10**	MÉTRICO

Pol. Ind. Plá Vallonga,
c/ Agua, 28
03006 ALICANTE (España)

+34 965 11 42 82
+34 965 11 48 62
tecnicocomercial@hidroten.es

Technical &
Commercial Service
+ 34 966 105 888

www.hidroten.es

Product Documents

Product Certificates

Company Certificates







Pol. Ind. Plá Vallonga,
c/ Agua, 28
03006 ALICANTE (España)

+34 965 11 42 82
+34 965 11 48 62
tecnicocomercial@hidroten.es

Technical &
Commercial Service
+ 34 966 105 888

www.hidroten.es