Netvitc System® Filters

Vertical stoten strainer Netvitc® outlet

ITEM 931

REFERENCE	DESCRIPTION	Net weight	Volumen (m^3)	Gross weight	Unidades lote
108N951	SNS FILTER VERTICAL STONE NETVITC/O 3"	3,869	0,06149	8,66	2
108n952	SNS FILTER VERTICAL STONE NETVITC/O 4"	5.036	0.06149	5.956	1



Pol. Ind. Plá Vallonga,
c/ Agua, 28
03006 ALICANTE (España)

+34 965 11 42 82
+34 965 11 48 62
tecnicocomercial@hidroten.es

Technical &
Commercial Service
+ 34 966 105 888

www.hidroten.es

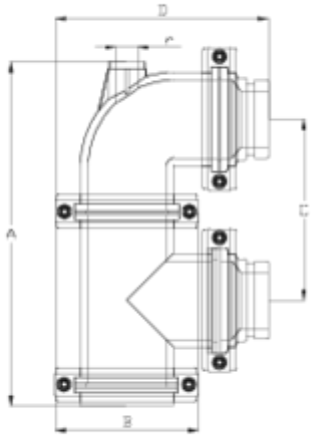

ITEM 931 | Vertical stoten strainer Netvitc® outlet

CÓDIGO	Ø	PESOS	Brida SNS	A	B	C	D	r	PN	MEDIDA
8N951	3"	3876	90	397	164	210	=188+6+64	3/4"	**PN10**	MÉTRICO
8N952	4"	5277	110	456	188	245	=211+6+90	1"	**PN10**	MÉTRICO

Pol. Ind. Plá Vallonga,
c/ Agua, 28
03006 ALICANTE (España)

+34 965 11 42 82
+34 965 11 48 62
tecnicocomercial@hidroten.es

Technical &
Commercial Service
+ 34 966 105 888

www.hidroten.es

Product Documents

Product Certificates

Company Certificates







Pol. Ind. Plá Vallonga,
c/ Agua, 28
03006 ALICANTE (España)

+34 965 11 42 82
+34 965 11 48 62
tecnicocomercial@hidroten.es

Technical &
Commercial Service
+ 34 966 105 888

www.hidroten.es