## Válvulas de bola tres vías 'Segurity'

# SALIDA R/H ACT. ELEC. 220V. - FPM

## ITEM 862



| REFERENCIA | DESCRIPCIÓN | Peso neto | Volumen ($m^3$) | Peso bruto | Unidades lote |
|---|---|---|---|---|---|
| 111V513 | V.E.3V L R/H 1" ACT.ELECT FPM | 0 | 0,01782 | 0 | 1 |
| 111V515 | V.E.3V L R/H 1 1/2" ACT.ELECT FPM | 3,4964 | 0,04460 | 4,1622 | 1 |
| 111V516 | V.E.3V L R/H 2" ACT.ELECT FPM | 4,439 | 0,04460 | 5,1048 | 1 |
| 111V517 | V.E.3V L R/H 2 1/2" ACT.ELECT FPM | 7,3559 | 0,04836 | 8,1994 | 1 |
| 111V553 | V.E.3V T R/H 1" ACT.ELECT FPM | 0 | 0,01782 | 0 | 1 |
| 111V555 | V.E.3V T R/H 1 1/2" ACT.ELECT FPM | 3,4964 | 0,04460 | 4,1622 | 1 |
| 111V556 | V.E.3V T R/H 2" ACT.ELECT FPM | 4,439 | 0,04460 | 5,1048 | 1 |
| 111V557 | V.E.3V T R/H 2 1/2" ACT.ELECT FPM | 7,3559 | 0,04836 | 8,1994 | 1 |

Pol. Ind. Plá Vallonga,
c/ Agua, 28
03006 ALICANTE (España)

+34 965 11 42 82
+34 965 11 48 62
tecnicocomercial@hidroten.es

Servicio Atención
Técnica comercial
+ 34 966 105 888

www.hidroten.es

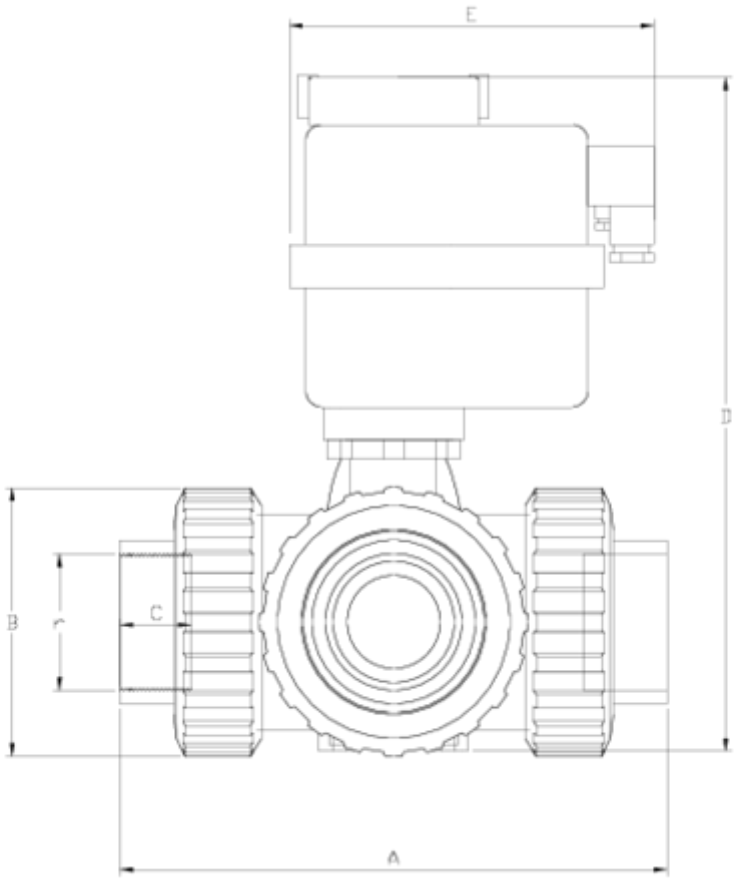


# ITEM 862 | SALIDA R/H ACT. ELEC. 220V. - FPM

| VITON | r | Actuador | PESO (g) | DN | Modelo | A | B | C | D | E | PN | TIPO ROSCA |
|---|---|---|---|---|---|---|---|---|---|---|---|---|
| 11V513 | 1" | H10 | 1636 | 25 | L | 162 | 72 | 23 | 220 | 169 | **PN16** | BSP |
| 11V515 | 1 1/2" | H20 | 3531 | 40 | L | 210 | 103 | 33 | 279 | 177 | **PN16** | BSP |
| 11V516 | 2" | H35 | 4518 | 50 | L | 261 | 120 | 29 | 318 | 177 | **PN16** | BSP |
| 11V517 | 2 1/2" | H55 | 7513 | 65 | L | 322 | 150 | 33 | 384 | 177 | **PN10** | BSP |
| 11V553 | 1" | H10 | 1632 | 25 | T | 162 | 72 | 23 | 220 | 169 | **PN16** | BSP |
| 11V555 | 1 1/2" | H20 | 3521 | 40 | T | 210 | 103 | 33 | 279 | 177 | **PN16** | BSP |
| 11V556 | 2" | H35 | 4500 | 50 | T | 261 | 120 | 29 | 318 | 177 | **PN16** | BSP |
| 11V557 | 2 1/2" | H55 | 7473 | 65 | T | 322 | 150 | 33 | 384 | 177 | **PN10** | BSP |

Pol. Ind. Plá Vallonga,
c/ Agua, 28
03006 ALICANTE (España)

+34 965 11 42 82
+34 965 11 48 62
tecnicocomercial@hidroten.es

Servicio Atención
Técnica comercial
+ 34 966 105 888

www.hidroten.es

## Documentación de Producto

## Certificados de Producto

## Certificados de Empresa



















Pol. Ind. Plá Vallonga,
c/ Agua, 28
03006 ALICANTE (España)

+34 965 11 42 82
+34 965 11 48 62
tecnicocomercial@hidroten.es

Servicio Atención
Técnica comercial
+ 34 966 105 888

www.hidroten.es