PVC-U pressure fittings

90º reducing tee compression fitting outlet

ITEM 893

REFERENCE	DESCRIPTION	Net weight	Volumen (m^3)	Gross weight	Unidades lote
1001879	90º REDUCING TEE COMPRESSION FITTINGOUTLET50-20-50	0.214233	0.03129	7	30
1001880	90º REDUCING TEE COMPRESSION FITTINGOUTLET50-25-50	0.2362	0.03129	7.659	30
1001881	90º REDUCING TEE COMPRESSION FITTINGOUTLET63-20-63	0.29294	0.04717	9.43	30
1001882	90º REDUCING TEE COMPRESSION FITTINGOUTLET63-25-63	0.3296	0.04717	10.445	30
1001885	90º REDUCING TEE COMPRESSION FITTINGOUTLET90-32-90	0.96485	0.04717	12.22	12
1001886	90º REDUCING TEE COMPRESSION FITTINGOUTLET90-63-90	0	0.04717	0	12

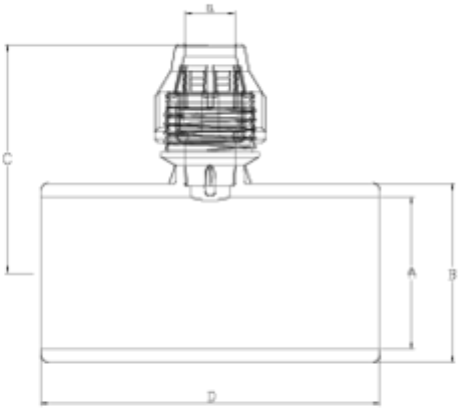

ITEM 893 | 90º reducing tee compression fitting outlet

CÓDIGO	A-a	PESO (g)	B	C	D	PN	MEDIDA
01879	50-20	190	60	88	114	**PN16**	MÉTRICO
01880	50-25	206	60	91	114	**PN16**	MÉTRICO
01881	63-20	305	76	95	141	**PN16**	MÉTRICO
01882	63-25	330	76	98	141	**PN16**	MÉTRICO
01885	90-32	1030	108	122	199	**PN16**	MÉTRICO
01886	90-63	1400	108	168	199	**PN16**	MÉTRICO

Product Documents

Product Certificates

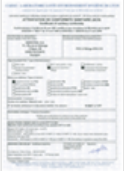

Company Certificates

Pol. Ind. Plá Vallonga,
c/ Agua, 28
03006 ALICANTE (España)

+34 965 11 42 82
+34 965 11 48 62
tecnicocomercial@hidroten.es

Technical &
Commercial Service
+ 34 966 105 888

www.hidroten.es