## PVC-U pressure fittings

# 90º reducing tee compression fitting outlet

## ITEM 893

| REFERENCE | DESCRIPTION | Net weight | Volumen ($m^3$) | Gross weight | Unidades lote |
|---|---|---|---|---|---|
| 1001879 | 90º REDUCING TEE COMPRESSION FITTINGOUTLET50-20-50 | 0.214233 | 0.03129 | 7 | 30 |
| 1001880 | 90º REDUCING TEE COMPRESSION FITTINGOUTLET50-25-50 | 0.2362 | 0.03129 | 7.659 | 30 |
| 1001881 | 90º REDUCING TEE COMPRESSION FITTINGOUTLET63-20-63 | 0.29294 | 0.04717 | 9.43 | 30 |
| 1001882 | 90º REDUCING TEE COMPRESSION FITTINGOUTLET63-25-63 | 0.3296 | 0.04717 | 10.445 | 30 |
| 1001885 | 90º REDUCING TEE COMPRESSION FITTINGOUTLET90-32-90 | 0.96485 | 0.04717 | 12.22 | 12 |
| 1001886 | 90º REDUCING TEE COMPRESSION FITTINGOUTLET90-63-90 | 0 | 0.04717 | 0 | 12 |

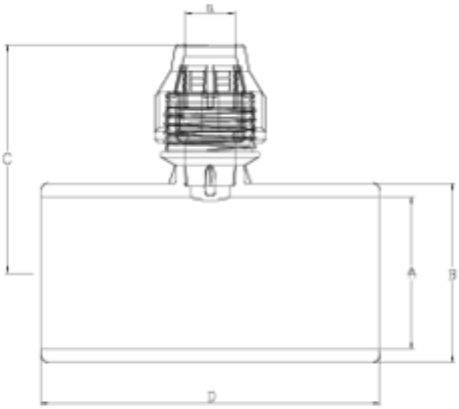


## ITEM 893 | 90º reducing tee compression fitting outlet

| CÓDIGO | A-a | PESO (g) | B | C | D | PN | MEDIDA |
|---|---|---|---|---|---|---|---|
| 01879 | 50-20 | 190 | 60 | 88 | 114 | **PN16** | MÉTRICO |
| 01880 | 50-25 | 206 | 60 | 91 | 114 | **PN16** | MÉTRICO |
| 01881 | 63-20 | 305 | 76 | 95 | 141 | **PN16** | MÉTRICO |
| 01882 | 63-25 | 330 | 76 | 98 | 141 | **PN16** | MÉTRICO |
| 01885 | 90-32 | 1030 | 108 | 122 | 199 | **PN16** | MÉTRICO |
| 01886 | 90-63 | 1400 | 108 | 168 | 199 | **PN16** | MÉTRICO |

## Product Documents

## Product Certificates

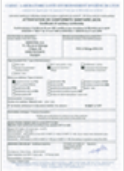

## Company Certificates

Pol. Ind. Plá Vallonga,
c/ Agua, 28
03006 ALICANTE (España)

+34 965 11 42 82
+34 965 11 48 62
tecnicocomercial@hidroten.es

Technical &
Commercial Service
+ 34 966 105 888

www.hidroten.es